Owner's Manual

Manufactured By

SEGA®

TLX 910-335-1621

Congo Bongo™ Owner's Manual
Copyright © 1983 By SEGA Electronics, Inc., All Rights Reserved

Table of Contents

List of Illustrations

Introduction 1

Important Notes 2

Game Concept 3

Scoring 4

Option Selection 5

Theory of Operation 7

Self-Test 10

Parts Catalog 20

700-0134 Top Assembly 21

- Ground Plane Assembly 28
- Volume Control Block Assembly 30
- Game Electronics 32
- Interface Board Assembly 34

700-0137 T-8 Cocktail Top Assembly 36

- T-8 Cabinet Accessory Assembly 40
- Control Panel Assembly 43
- 8-Way Joystick Assembly 45
- Power Supply Assembly 47
- Regulator Unit 49
- Nanao MC-2000-S 51

700-0138 Top Assembly 65

700-0139 Top Assembly 72

- Component Shelf Assembly 79
- Operator Control Block Assembly 81

Common Assemblies 83

- AC Junction Box Assembly 84
- EMI Transformer Assembly 87
- Flourescent Lamp Assembly 89
- Control Panel Assembly 91
- 8-Way Joystick Assembly 94
- Color Monitor Assembly 96
- Electrohome G07-907 98
- Wells Gardner 19K4675 106
- Wells Gardner 19K4961 123
- 834-5197 IC Board Assembly (3-board assembly) 140
- 834-5198 IC Board Assembly (2-board assembly) 142

Table of Contents (cont.)

Control Board Assembly 144
Control Board 2 Assembly 149
Video Board Assembly 154
Sound Board Assembly 158
G-80 Power Supply Assembly 162
G-80 Power Supply PC Assembly 166
Schematics 169
Comments Mailer

List of Illustrations

DIP Switch Location 5
Diagnostics Organization 10
Assembly Organization 17
700-0134 Top Assembly 25
Ground Plane Assembly 29
Volume Control Block Assembly 31
Game Electronics Assembly 33
Interface Board Assembly 35
700-0137 T-8 Cocktail Top Assembly 39
T-8 Cabinet Accessory Assembly 42
Control Panel Assembly 44
8-Way Joystick Assembly 46
Power Supply Assembly 48
Regulator Unit 50
Nanao MC-2000-S 60
700-0138 Top Assembly 69
700-0139 Top Assembly 76
Component Shelf Assembly 80
Operator Control Block Assembly 82
Common Assemblies
AC Junction Box Assembly 86
EMI Transformer Assembly 88
Flourescent Lamp Assembly 90
Control Panel Assembly 92
8-Way Joystick Assembly 95
Color Monitor Assembly 97
Electrohome G07-907 103
Wells Gardner 19K4675 119
Wells Gardner 19K4961 138
834-5197 IC Board Assembly (3-board assembly) 141
834-5198 IC Board Assembly (2-board assembly) 143
Control Board Assembly 148
Control Board 2 Assembly 153
Video Board Assembly 157
Sound Board Assembly 161
G-80 Power Supply Assembly 165
G-80 Power Supply PC Assembly 168

List of Illustrations (cont.)

Schematics 169
700-0134 Cabinet Wiring Diagram 170
700-0137 T-8 Cocktail Wiring Diagram 171
700-0138 Cabinet Wiring Diagram 172
700-0139 Cabinet Wiring Diagram 173
EMI Transformer
AC Junction Box
Operator Control Block 174
Regulator Board
Regulator Unit 175
Control Board 176
Control Board 2 180
Video Board 186
Sound Board 190
Electrohome G07-907 192
Wells Gardner 19K4675 193
Nanao MC-2000-S 194
Wells Gardner 19K4961 195
G-80 Power Supply 196
Switching Regulator 197

Introduction

CONGO BONGO™ is a micro-processor based coin-operated electronic game, that makes extensive use of digital integrated circuitry and television monitor concepts. This manual is intended for the use of maintenance technicians who possess a general working knowledge of solid-state circuitry and video monitor theory. Any individual NOT knowledgeable in these areas SHOULD NOT attempt repair of the electronic portions of the game.

In addition to this manual and training in electronics, troubleshooting and repair will be facilitated by: access to general electronic type handtools, a multimeter, a 50 to 100 MHz oscilloscope and a logic probe would be helpful.

Technical assistance is available toll-free by calling:

1-800-854-1938 outside California

1-800-722-8576 inside California

Parts Information assistance is available toll-free by calling:

1-800-854-1900 outside California

1-800-722-8575 inside California

Questions or comments concerning CONGO BONGO™ or any of our games are welcome and should be directed to:

Customer Service Manager
SEGA Electronics, Inc.
16250 Technology Drive
San Diego, California 92127-1985

Important Notes

The following note is included in compliance with FCC rules:
WARNING: This equipment generates and uses radio frequency energy and if not installed and used properly, i.e., in strict accordance with the instruction manual, may cause harmful interference to radio communications. it has been tested and found to comply with the limits for a Class A computing device pursuant to Subpart J of Part 15 of FCC rules, which are designed to provide reasonable protection against such interference when operated in a commercial environment. Operation of this equipment in a residential area is likely to cause interference in which case the user at his own expense will be required to take whatever measures may be required to correct the interference.

Other Notes

NEVER replace any components with anything other than exact replacement parts.

NEVER remove circuit board connections while power is on.

DO NOT replace fuses with anything other than the proper value. A blown fuse indicates an overload condition within the game. Replacing fuses with a higher value can cause severe damage to internal components if an overload occurs.

ALWAYS consult the manual before attempting repairs.

SPARE PARTS will be maintained at SEGA Electronics, Inc. for a period of five (5) years after the date of manufacture of the game concerned.

Game Concept

Jungle drums pound as CONGO BONGO™, the cartoon adventure that pits man against monkey, takes you on the craziest, most action-packed safari ever! With fantastic 3-dimensional-like graphics and wonderful native sounds, SEGA's CONGO BONGO lures explorers of all ages to chase Bongo, the mischievious gorilla, through four vivid scenes of jungle fun. By use of an 8-way joystick and a jump button, the player maneuvers his hunter through the various scenes and avoids obstacles and dangers in his path.

In the first scene, Bongo roars defiantly from the top of Steep Peak as the hunter approaches. The hunter must climb the treacherous cliffside to reach the bridge above, while avoiding the bouncing coconuts Bongo throws down. Once accross the bridge, the hunter must slide down a slope and knock the green monkey off the ledge. Green monkeys will block the hunter's path and if not pushed over a cliff or jumped over, the hunter cannot pass.

Next the hunter must jump over a perilous, collapsing chasm and climb the cliff to Primate Plateau. Here several friendly-looking monkeys scamper about playfully. Be careful though, as the cheerful chimps will cling to the hunter, slowing him down. By using the jump button, the player can shake the chimps off the hunter, but it must be done quickly, because if three chimps grab the hunter, they will pick the hunter up and throw him over the side and into the river. Once past the monkeys, the hunter must jump the river again and climb up to the top where a chagrined Bongo loses his smile and runs off into the jungle.

In the second scene, Bongo taunts the hunter from across Snake Lake. Immediately scorpions descend upon the hunter and he must decide which route to take quickly. Snake Lake is a maze of bridges and islands with snakes guarding every route. The hunter must avoid the snakes by jumping over them. The hunter should attempt to reach the island nearest Bongo and jump onto the back of the hippo and then safely to shore. Beware of the hippo as he dives and surfaces. Once safely to shore, Bongo gets worried and scampers off again.

The third scene opens with the hunter in a mole hole on Rhino Ridge. A herd of charging rhinos must be avoided in the hunter's attempt to capture Bongo. The hunter can avoid the rhinos by jumping over them or ducking into a mole hole. When ducking into a mole hole, the player must depress the jump button for the hunter to duck down and avoid the rhinos.

In the fourth scene, a weary Bongo naps in a chair on the far side of Lazy Lagoon. To reach Bongo, the hunter must cross Lazy Lagoon by jumping on lily pads, hippos and fish, that might sink at minute. Once across Lazy Lagoon, the hunter must dodge the last charging rhinos and climb the last bluff to capture Bongo. After Bongo is captured, the scenes repeat with increasing difficulty.

CONGO BONGO is a one or two player game with players alternating at the loss of each hunter. Each scene is timed by the bonus counter in the upper left corner of the screen. As time passes, the bonus decreases. If the bonus counter reaches zero, the player loses that hunter, the bonus counter is reset and play continues if he has other hunters available. Game ends with the loss of the last hunter.

Scoring

	POINTS
EACH STEP TAKEN	10
JUMPING ONTO HIPPO, FISH OR LILY PAD (INCREASES BY 50 EACH ROUND)	100
JUMPING INTO A MOLE HOLE	1000
JUMPING ACROSS A CHASM	500

AT THE SUCCESSFUL COMPLETION OF EACH ROUND, THE PLAYER IS AWARDED THE NUMBER OF POINTS REMAINING IN THE BONUS BOX.

Option Selection

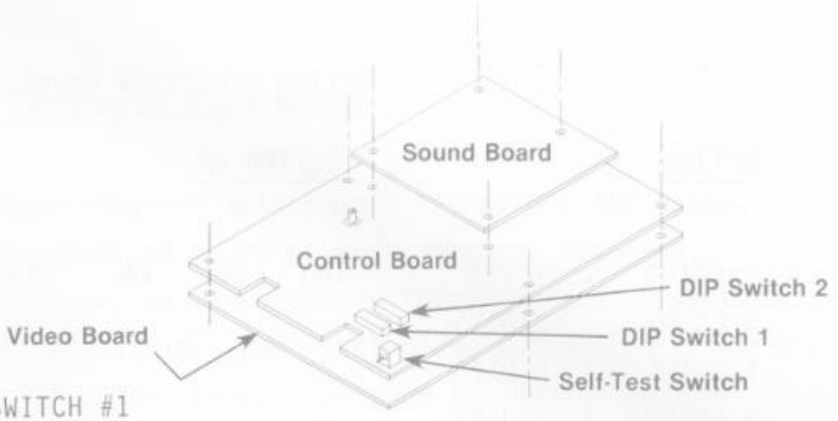

OPTION	SWITCH #1							
	1	2	3	4	5	6	7	8
UPRIGHT	X	X	X	X	X	X	X	OFF
TABLE	X	X	X	X	X	X	X	ON
SOUND ON	X	X	X	X	X	X	ON	X
SOUND OFF	X	X	X	X	X	X	OFF	X
FREE PLAY	X	X	X	X	OFF	OFF	X	X
5 EXTRA HUNTERS	X	X	X	X	OFF	ON	X	X
4 EXTRA HUNTERS	X	X	X	X	ON	OFF	X	X
3 EXTRA HUNTERS	X	X	X	X	ON	ON	X	X
DIFFICULTY: EASY	X	X	ON	ON	X	X	X	X
MEDIUM	X	X	ON	OFF	X	X	X	X
HARD	X	X	OFF	ON	X	X	X	X
HARDEST	X	X	OFF	OFF	X	X	X	X
BONUS AT: 10,000	ON	ON	X	X	X	X	X	X
20,000	ON	OFF	X	X	X	X	X	X
30,000	OFF	ON	X	X	X	X	X	X
40,000	OFF	OFF	X	X	X	X	X	X

OPTION	SWITCH #2							
	1	2	3	4	5	6	7	8
4 COINS 1 CREDIT	ON	ON	ON	ON	ON	ON	ON	ON
3 COINS 1 CREDIT	ON	ON	ON	OFF	ON	ON	ON	OFF
2 COINS 1 CREDIT	ON	ON	OFF	ON	ON	ON	OFF	ON
1 COIN 1 CREDIT	ON	ON	OFF	OFF	ON	ON	OFF	OFF
1 COIN 2 CREDITS	ON	OFF	ON	ON	ON	OFF	ON	ON
1 COIN 3 CREDITS	ON	OFF	ON	OFF	ON	OFF	ON	OFF
1 COIN 4 CREDITS	ON	OFF	OFF	ON	ON	OFF	OFF	ON
1 COIN 5 CREDITS	ON	OFF	OFF	OFF	ON	OFF	OFF	OFF
1 COIN 6 CREDITS	OFF	ON	ON	ON	OFF	ON	ON	ON

OPTION SELECTION (cont.)

OPTION	SWITCH #2							
	1	2	3	4	5	6	7	8
2 COINS 1 CREDIT 4 COINS 2 CREDITS 5 COINS 3 CREDITS 6 COINS 4 CREDITS	OFF	ON	ON	OFF	OFF	ON	ON	OFF
2 COINS 1 CREDIT 3 COINS 2 CREDITS 4 COINS 3 CREDITS	OFF	ON	OFF	ON	OFF	ON	OFF	ON
1 COIN 1 CREDIT 2 COINS 2 CREDITS 3 COINS 3 CREDITS 4 COINS 4 CREDITS 5 COINS 6 CREDITS	OFF	ON	OFF	OFF	OFF	ON	OFF	OFF
1 COIN 1 CREDIT 2 COINS 2 CREDITS 3 COINS 3 CREDITS 4 COINS 5 CREDITS	OFF	OFF	ON	ON	OFF	OFF	ON	ON
1 COIN 1 CREDIT 2 COINS 3 CREDITS	OFF	OFF	ON	OFF	OFF	OFF	ON	OFF
1 COIN 2 CREDITS 2 COINS 4 CREDITS 3 COINS 6 CREDITS 4 COINS 8 CREDITS 5 COINS 11 CREDITS	OFF	OFF	OFF	ON	OFF	OFF	OFF	ON
1 COIN 2 CREDITS 2 COINS 4 CREDITS 3 COINS 6 CREDITS 4 COINS 9 CREDITS	OFF	OFF	OFF	OFF	OFF	OFF	OFF	OFF

Theory of Operation

CONGO BONGO™ is a "state-of-the-art" electronic microprocessor based, video game. The result of hundreds of hours of work, design, research, experiment and more work. However, as with any electronic device, component failure or other problems can result in a game that doesn't function properly, or doesn't function at all. In either case, your game is "down", and so critically, are your profits.

Your objective is to fix it as quickly as possible, and logical troubleshooting goes a long way toward that repair. Although many troubleshooting methods may be familiar to you, procedural logic is common among them, and might be stated in this order: visual inspection, symptom recognition, symptom isolation, function isolation, component isolation and repair. Familiarity with the equipment in question will allow you to bypass one or more of these steps, as any particular problem may be obvious to you, or may have happened before. In general though, these 6 steps form a good premise upon which to approach your "down" game.

An extremely important item in our procedure is the first mentioned, giving the gear the "once over". A large percentage of failures found in electronics, show themselves visually and often a great deal of time can be saved by inspecting for burnt or blown components, loose or disconnected wiring or connectors, or PCB traces burnt or pulled up. Thorough visual inspections become increasingly important the closer you get to the faulty item, and should be repeated each time another portion of the game is eliminated. Symptom recognition (as with all electronic troubleshooting) in your CONGO BONGO™ depends first, on knowing what a proper display is, and second, knowing how your display differs from a normal one. Symptom isolation follows naturally; (i.e., "I have no picture", "I have no sound", "I have no control over the ship", "the picture is scrambled"), ergo, a video, audio, input or logic problem. Function isolation, such as a sync problem with the video, requires that you consider those functions that go to make up video sync. Is it a monitor problem, or an "on-the-board" problem? A monitor input check to verify the signal will tell you. Does the board have the voltage (from the power supply) that it needs? Yes? We must have a board failure, as we've just isolated down to function. Taking our sync problem further, before we begin our search for an individual component, let's reapply that first item in

our "Logical Troubleshooting Procedure". Look at the board. Open resistors, diodes, and capacitors often give themselves away.

Noticing a trace literally burned open can save you serious "down-time". The board looks OK, so on we go. Specific component isolation relates to the specific nature of the failure, component commonality, proper inputting (both signal and power) and proper outputting (as in the case of an output held high, low, or floating by input port failure in the succeeding state). More general problems (such as a total loss of video sync) requires the more involved procedure of systematic elimination of possibilities. This operation can be expedited however, by dividing the circuit in half, establishing a "go-no/go" at that point, and again dividing the suspect circuit portion in half. The largest possible areas can be eliminated in this manner, dividing and sub-dividing until the individual component failure is found.

CONGO BONGO™ is a microprocessor based, digital-integrated circuit computer video game. The heart of the computer is the CPU (U4, Zone 7-C, Sht. 1, Control Bd., 834-5166), a Z80A (P/N 315-0041). The Alpha type device MUST ALWAYS be used, as the Z80 is not fast enough to run the programs.

Master timing is IC-driven by U122, a G501533 that provides a stable frequency for J-K flip flops U46 & U47, located on the Video Board, Zone 4-B of Sht. 2 (834-5167). The "Phase Three X" signal (03X) is applied to U-15 P-2 (Zone 3-D, Sht. 3, 834-5167) & is clocked out at pin 13 as the 1H frequency that appears thru P3 p-9 at the input to the CPU. U6 & Q10 (Zone 8-D, Sht. 1 of the Control Bd. 834-5166) polarize & reference 1H for input timing for U4 (Zone 7-C, Sht. 1, Control Board, 834-5166).

Manual system reset (Power-On) appears as a LO at P5 p-L (Zone 8-D, Sht. 2, Control Bd., 834-5166) and is then felt through filter BF8, & is applied to pin-26 of the CPU (U4, Sht. 1, Zone 7-C, Control Bd., 834-5166). Normal program interrupts (INT) are felt at pin-16 of the Z80A (an edge-triggered LO), and are the result of Input/Output activity timing with vertical blanking (an approx. 2 msec. instruction interrupt). The WAIT signal is used to synchronize that I/O activity during an interrupt to the CPU. U5 and 7 (Zone 7-C, Sht. 1, Control Bd., 834-5166) are address bus drivers. Three of the sixteen address lines pass through U56 (Zone 5-C, Sht. 1, Control Bd., 834-5166) and subsequently drive the Chip Enable inputs of EPROM IC's 32-35 and RAM IC's 36 & 37 (Sht. 1, Control Bd., 834-5166). U48 & 9, 62 & 63 (Sht. 4, Control Bd., 834-5166) are input ports on the data bus. U64 supplies service switch, game start and coinage to the input ports. U14 and 18 input

Coin B, and U15 and 18 input Coin A. U16 & 19 input service switch, while U64 & drives player start to I/O processor U9 (Zone 5-C, Sht. 1, Control Bd., 834-5166). IC111, 112 and 114 accesses/buffers Player Left/Right data, IC111 and 113 interfaces Fire data, and Option Selection is shared by all 4 74LS244's. Located on the Control Board is the Self-Test switch. When closed, it applies a LO to U4 p-17 (Zone 7-C, Sht. 1, Control Bd., 834-5166) initiating a systems/function verification outlined on the following page:

Self-Test

CONGO BONGO™ is equipped with a diagnostics self-testing program that is initiated by pressing the Self-Test button located on the Control Board Assembly. The test is used to detect malfunctions in Video alignment, I/O interface and P.C.B. electronics.

The test will appear in the following order, with the words "OK" or "BAD" being displayed on the screen in accordance with the condition of the tested circuit. Self-Test step sequencing is done by pressing the Player 1 button after each individual test.

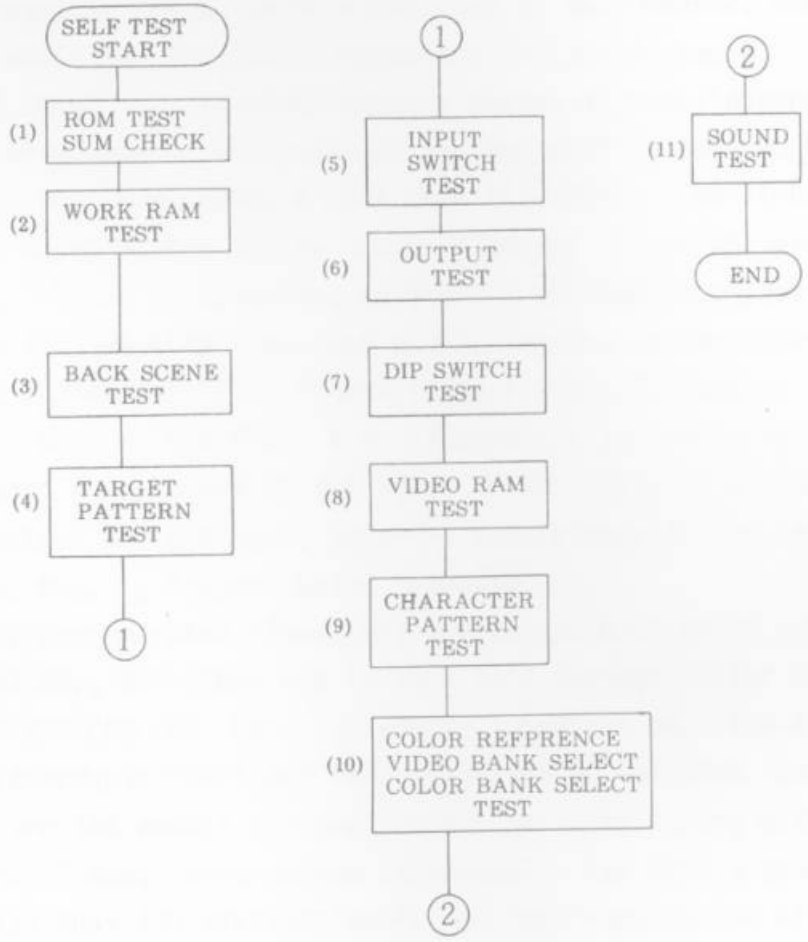

1. ROM Test

This test checks the four main program EPROMs by performing individual "check sum" tests. These EPROMs are located on the Control Board.

2. RAM Test

This test checks RAM 1 and RAM 2 by performing a cross-talk test between each adjacent bit in the RAMs. These RAMs are located on the Control Board.

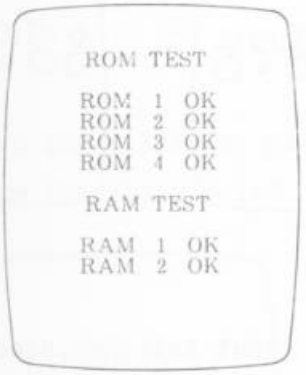

3. Background Scene Test

This test checks the background displays of the game in eight (8) individual steps. Advance through the steps by pressing the Player 1 button, until the eighth display (a blank screen) is reached.

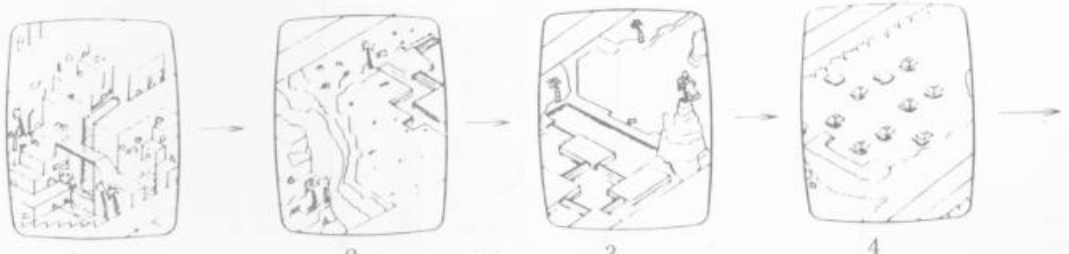

6. Output Test

This test verifies output ports used to interface computer software to game hardware.

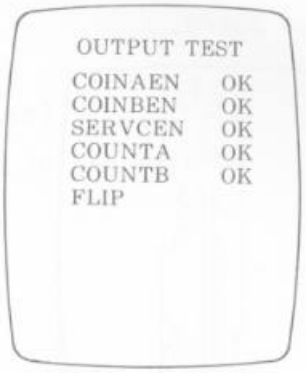

7. DIP Switches

Operation of the DIP Switches are checked here, internally, by simultaneously turning on, and then off, all odd switch positions, followed by all even switch positions. "Test 1" is displayed at the end of the cycle. Pressing the Player 1 button initiates "Test 2" for DIP Switch 2.

8. Video RAM Test

Here Video RAMs used for character pattern display are tested. These RAMs are located on the Video Board.

9. Character Pattern Test

This test checks the ROMs used for character patterns and picture patterns. During this test all the patterns contained within each ROM will be displayed. Character pattern ROMs are located on the Video Board.

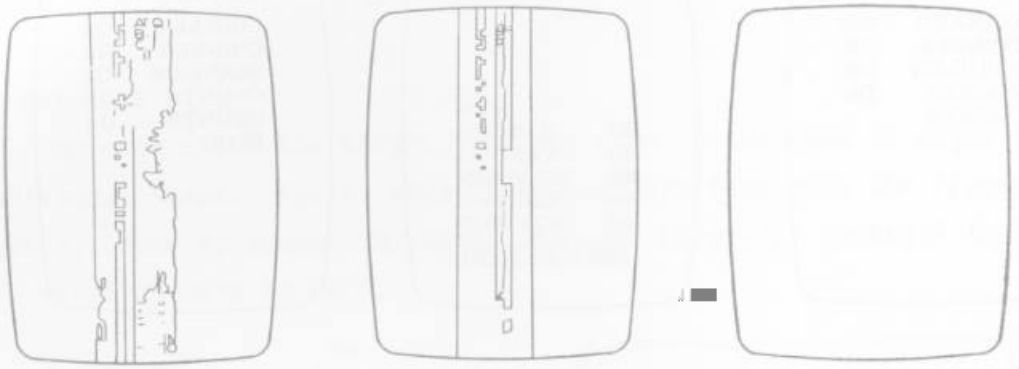

10. Color Control Reference Test

Character pattern and background picture color control is checked here by color reference changes with each pressing of the Player 1 button.

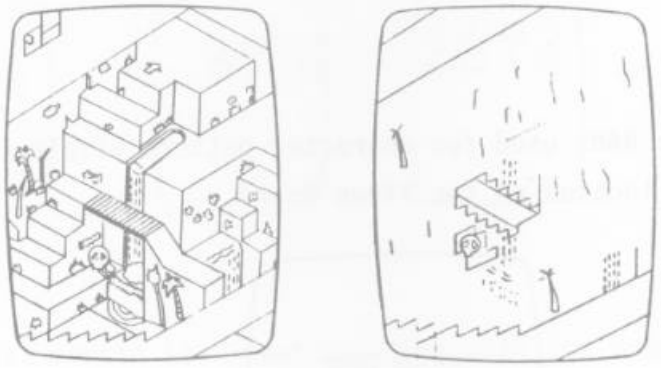

11. Sound Port Test

This test verifies that proper sound outputs are generated with each pressing of the Player 1 button. Twenty-nine individual sounds are generated, one at a time, sequenced by the Player 1 button, and appear in order on the following page.

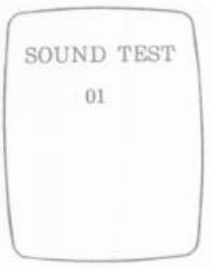

11. Sound Port Test (cont.)

01 No sound
02 Gorilla lullaby
03 Player victory music
04 Player clear music
05 "Player goes to Heaven" music (in the water)
06 "Player goes to Heaven" music (other than in the water)
07 Fire
08 Player step sound
09 Player drop sound
10 Player jump sound
11 "Monkey on my back" sound
12 Held by monkey sound
13 Hit by coconuts sound
14 "Crumbling crevasse" sound
15 Passage of snake sound
16 Rush of rhino sound (A)
17 Rush of rhino sound (B)
18 Rhino screeching to a stop sound
19 Player digging sound
20 Fish sound
21 Special Bonus sound
22 Credit sound
23 Gorilla laughing
24 Hippo sinking sound
25 Background music for scene # 1
26 Background music for scene # 2
27 Background music for scene # 3
28 Background music for scene # 4
29 Bonus score up sound

Due to the striking graphics employed in CONGO BONGO™, memory requirements for background generation are significant. On the VIDEO Bd. (834-5167) there are nine (9) 2764-30 64K X 8 EPROMs that hold video character, positioning, color and timing information, in addition to the five (5) program 2764-30's on the Control Bd. Background generation accessable memory (RAM) is provided by TTL IC's U12 and U53 (Zone 7-C and 3-D respectively, Sht. 2, on the VIDEO Bd., 834-5167), in addition to U59 on Sht. 4 of the Control Board (834-5166). RGB color data is found fully processed at P5 pins w, 19 and X respectively, on the Control Board (Zone 6-D, Sheet 2, 834-5166). Video COMPSYN (Composite Synchronization) can be found at the same location. U68 (Sht. 2, Zone 4-D, 834-5166) is the primary color PROM.

Just as the microprocessor Z80A is the heart of the game computer, so too is the Sound Board equipped with its own Z80A microprocessor as well as an 8255A-C Sound Generator (Zone 4-C & 7-C, Sht. 1, 834-5168, respectively). Imploying a 4.00 MHz crystal-driven (Zone 6-D, Sht. 1 834-5168) timing frequency at pin 6, U3 processes program data held by U10 & 11 to set enable parameters used by Sound Generator U1. U1 in turn processes external noise sources (Sht. 2, 834-5168) to produce an integrated sound output felt at P1 p-9 (Zone 8-C, Sht. 1, 834-5168). Back on the Control Board, P4 pin-3 (Sht. 3, Zone 5-C, 834-5166) inputs our sound to OP Amp U2, thru Volume Control pot. VR1 (Zone 8-D, Sht. 3, 834-5166) to the Audio Amplifier U1 (Zone 7-C, Sht. 3, 834-5166) & out to the speaker at P5 pins H & 7 (Zone 8-B, Sht. 3, 834-5166).

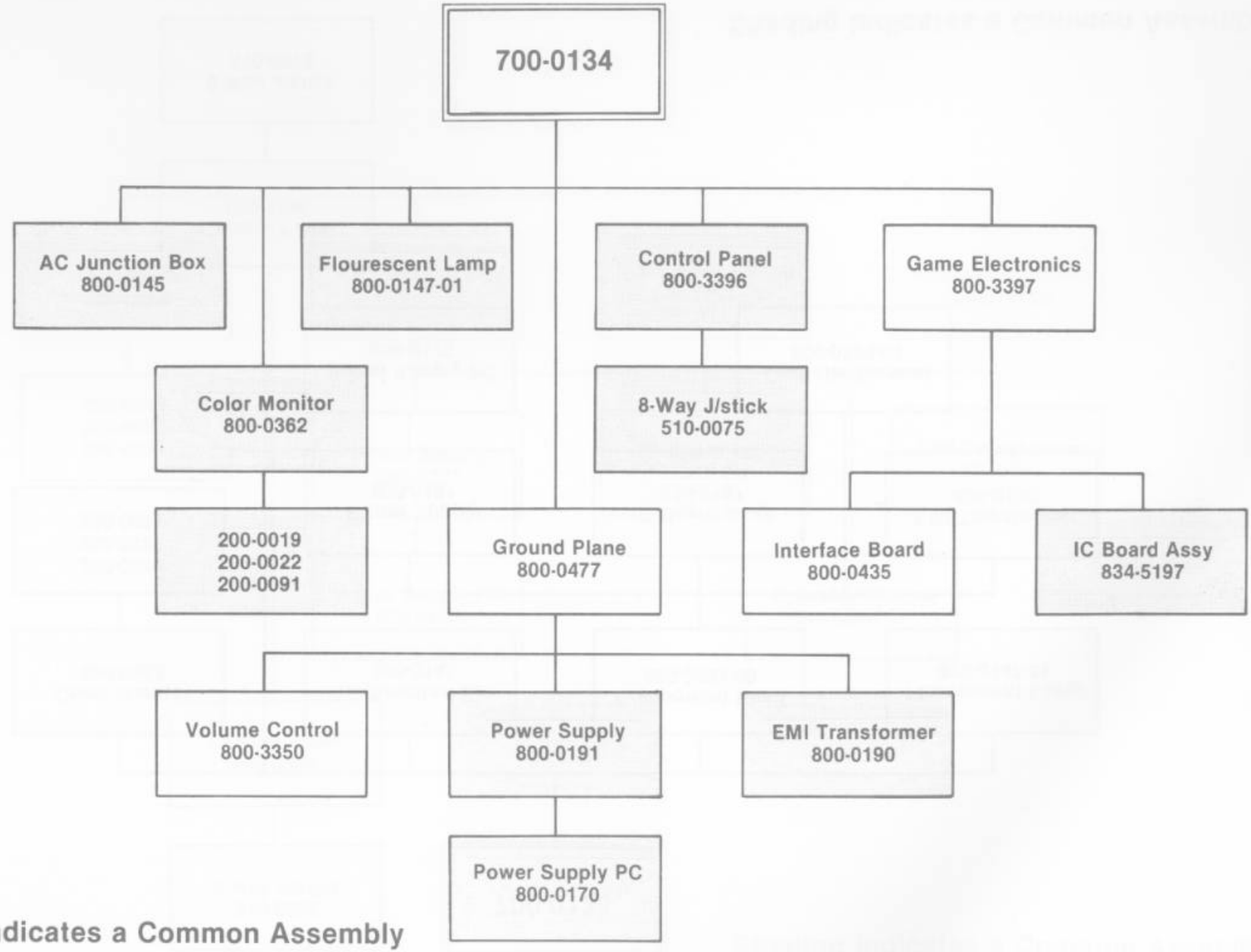

Shading indicates a Common Assembly

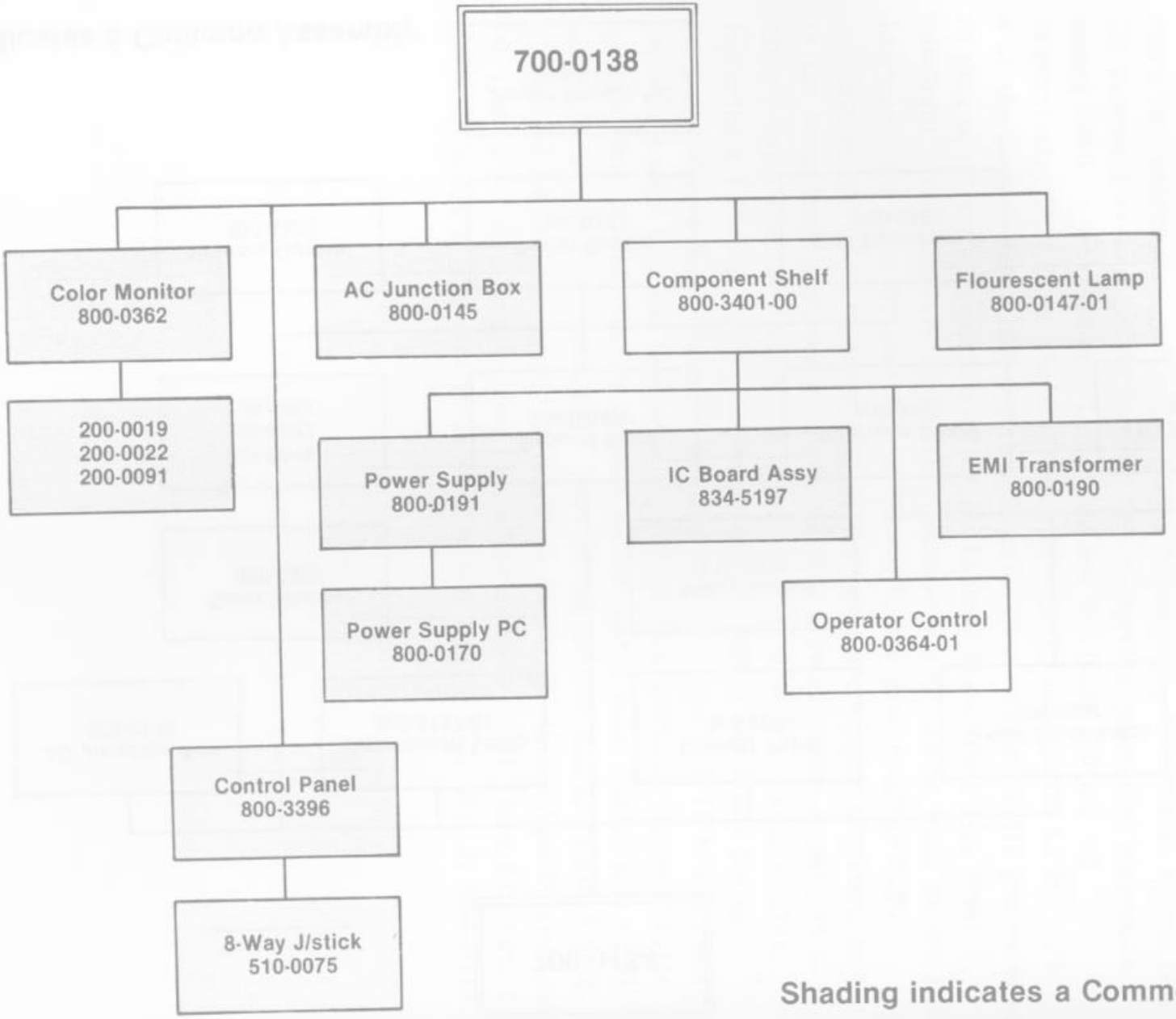

Shading indicates a Common Assembly

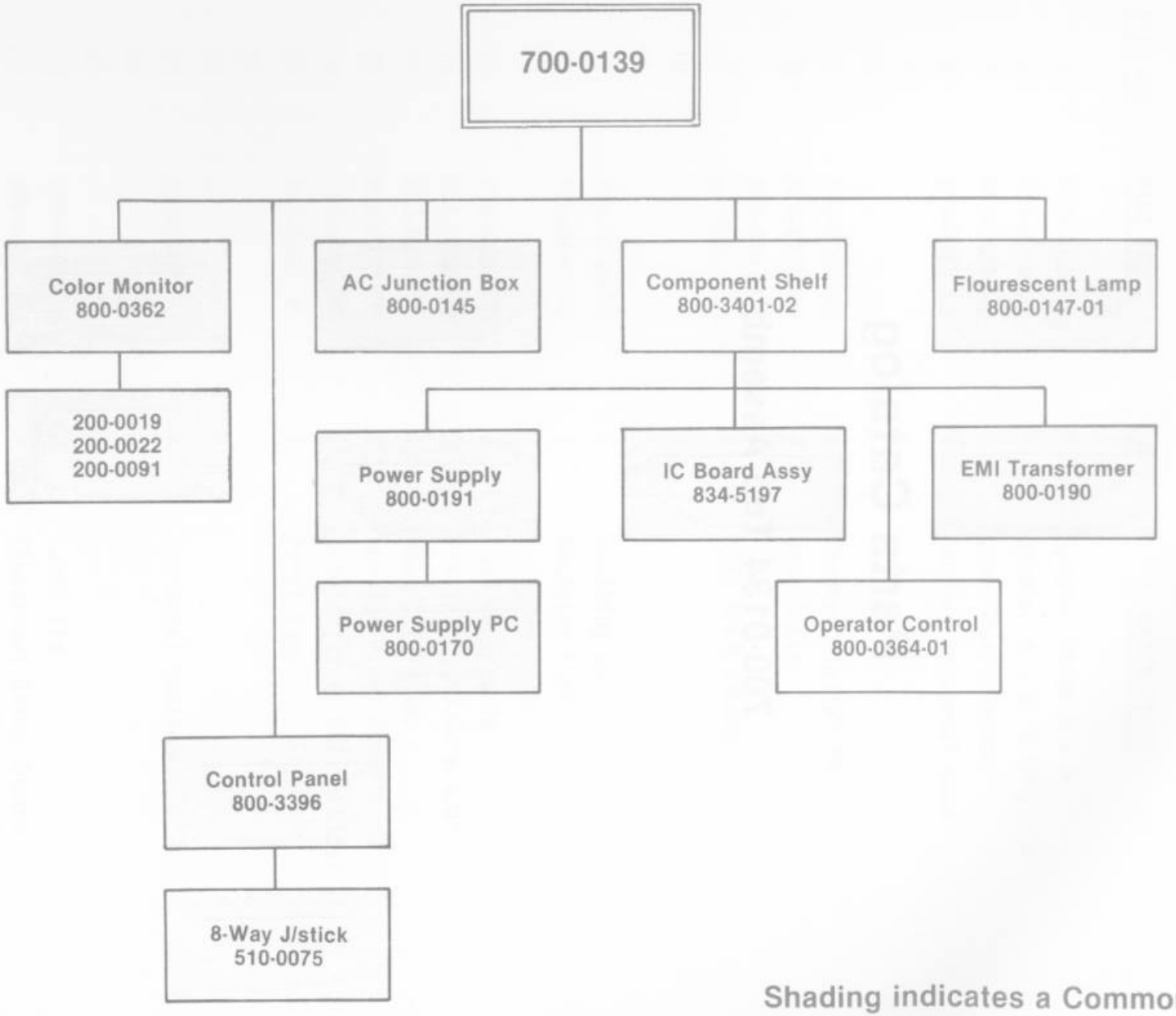

Shading indicates a Common Assembly

Parts Catalog

700-0134 Top Assembly

TOP ASSEMBLY

DRAWING NUMBER 700-0134

ITEM NO.	PART NO.	QTY. REQD.	DESCRIPTION
1	130-0002-00	1	Speaker Cover 6 x 9
2	130-0020-00	1	Speaker 6 x 9, 8 OHM, 10W
3	140-0021-00	1	Cover Junction Box
4	140-0055-03	1	Cabinet Universal Game
5			
6			
7	220-0008-00	1	Counter Digital 6V
8	220-0178-00	2	Draw Catch
9	220-0194-00 or 220-0195-00	2	Coin MECH W/Lamp
10			
11			
12	250-0038-00	1	Moulding Strip
13	250-0492-00	1	Moulding logo
14			
15	253-0222-00	2	Coin Receptacle
16	253-0238-00	1	Plastic Bag 3.00 x 4.00
17	253-0254-00	1	Mask CRT 19 IN.
18	253-0228-00	1	Monitor Panel Clear
19	253-0284-00	1	Bezel Plastic CRT Vertical
20	253-0328-00	1	Panel logo
21			
22			
23	260-0001-00	1	Fan Axial Cooling
24			
25			
26	280-0005-00	40	Cable Tie
27	280-0362-00	2	Electrical Crimp Sleeve
28	280-0475-00	30	Staple
29	280-0495-00	1	Spring, CPRSN .360 OD
30			

TOP ASSEMBLY DRAWING NUMBER 700-0134

ITEM NO.	PART NO.	QTY. REQD.	DESCRIPTION
31	281-0004-12	1	SCR 8-32 x .750 PN HD PHIL MACH
32	281-0006-08	4	SCR 10-32 x .500 PN HD PHIL MACH
33	281-0014-28	4	SCR 8-32 x 1.75 OVH PHIL MACH
34	281-0042-12	2	SCR 6-20 x .750 PN HD PHIL Sheet Metal Type AB
35	281-0042-32	4	SCR 6-20 x 2.00 PN HD PHIL Sheet Metal Type AB
36	281-0045-12	15	SCR 10-16 x .750 PN HD PHIL Sheet Metal Type AB
37	281-0134-12	4	SCR 8-18 x .750 PN HD PHIL Sheet Metal Type AB, Black
38	283-0062-05	1	Washer #8 Lock INT Tooth
39	282-0005-20	14	Bolt 10-24 x 1.25 CRG HD, MACH, Black
40	282-0017-24	4	Bolt 1/4-20 x 1.50 HEX HD MACH
41	283-0060-23	1	Washer #8 Flat, STL, Wide
42	283-0060-24	2	Washer #10 Flat, STL, Narrow
43	283-0060-18	6	Washer #6 Flat, STL, Narrow
44	283-0060-22	5	Washer #8 Flat, STL REG
45	283-0060-25	26	Washer #10 Flat, STL, REG
46	283-0060-34	4	Washer # 1/4 Flat, STL, LGE
47	283-0061-05	4	Washer #8 Lock, Split, STL
48	283-0061-06	33	Washer #1- Lock, Split, STL
49	283-0061-08	4	Washer # 1/4 Lock, Split, STL
50	283-0072-16	1	Nut 10-32 HEX MACH
51	283-0071-14	1	Nut 10-24 Wing, STL, MACH
52	283-0072-13	5	Nut 8-32 HEX, MACH
53	283-0072-15	14	Nut 10-24 HEX, MACH
54	289-0002-02	2	Cable Clamp .250 Nylon
55	320-0020-00	2'	Sealant Foam
56	320-0051-00	1'	Tie Ribbon Wire Plastic Coated
57			

TOP ASSEMBLY DRAWING NUMBER 700-0134

ITEM NO.	PART NO.	QTY. REQD.	DESCRIPTION
58	390-0019-00	1	Lamp Fluorescent
59			
60	420-0030-00	1	Decal Caution 115V
61	420-0624-00	1	Light Baffle
62	420-0793-00	1	Decal Toll Free No.
63	420-0912-00	1	Decal FCC Rules Compliance
64	420-0914-07	1	Decal Original Game Seal
65	420-0917-00	1	Decal FCC Warning
66	420-0977-00	1	Graphic Interior
67	420-0978-00	1	Decal, Box
68	420-0979-00	1	Manual
69	420-0982-0	1	Decal Dip SW Settings
70	420-0993-00	1	Graphic Side Right
71	420-0994-00	1	Graphic Side Left
72	420-1007-00	1	Decal Game Instructions
73			
74			
75			
76			
77			
78	800-0145-00	1	Assy. AC Junction Box
79	800-0147-01	1	Fluorescent Lamp Assy. 2 UL
80	800-0232-00	1	Assy. Harn. GND
81	800-0322-00	1	Assy. Cord Fan
82	800-0329-00	1	Assy. Harn. Monitor AC
83	800-0330-00	1	Assy. Harn. GND Monitor
84	800-0362-00	1	Assy. Monitor CLR Vertical
85	800-0370-00	1	GND Strap
86	800-0371-00	1	Assy. Speaker Harn.
87	800-0372-00	1	Harn. Coin MECH
88	800-0423-06	1	Assy. GND Strap

TOP ASSEMBLY DRAWING NUMBER 700-0134

ITEM NO.	PART NO.	QTY. REQD.	DESCRIPTION
89	800-0423-07	1	Assy. GND Strap
90	800-0477-00	1	Assy. Ground Plane
91	800-3396-00	1	Control Panel Assy.
92	800-3397-00	1	Assy. Game Electronics
93	800-3399-00	1	Master Harn. Assy.
94	800-0478-00	1	Power Harn. Assy.
	420-0780-00	REF	Game Shipping Kit

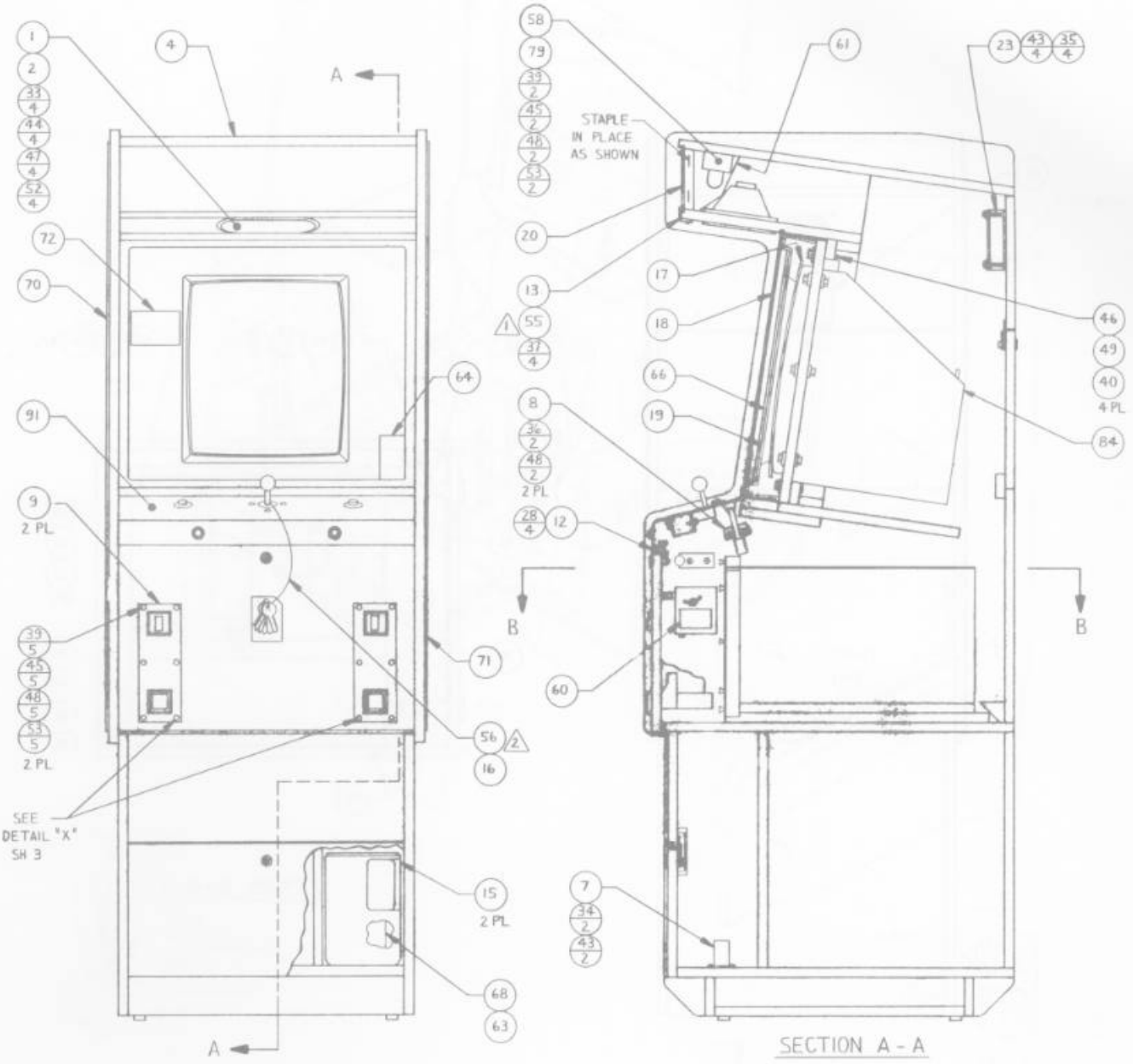
STAPLE IN PLACE AS SHOWN
SEE DETAIL "X" SH 3
2 PL
4 PL
SECTION A - A

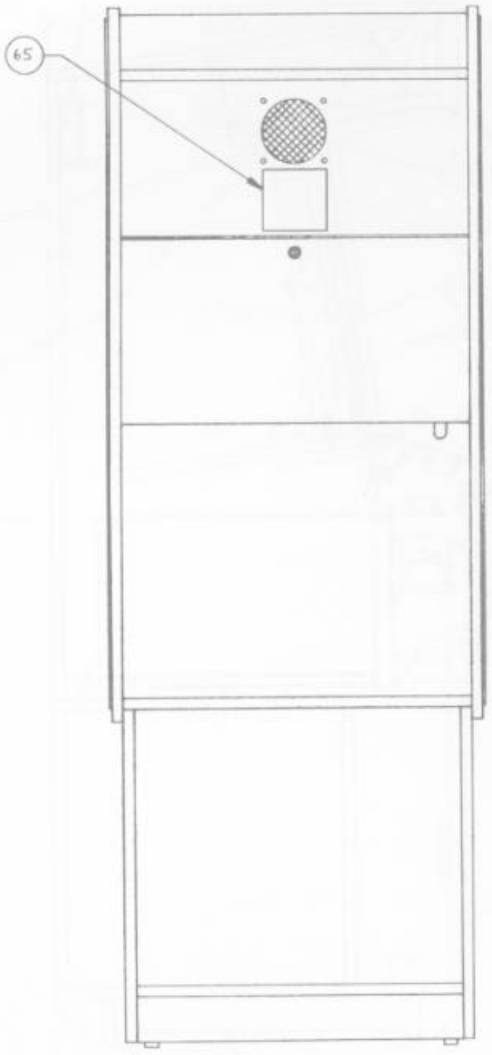

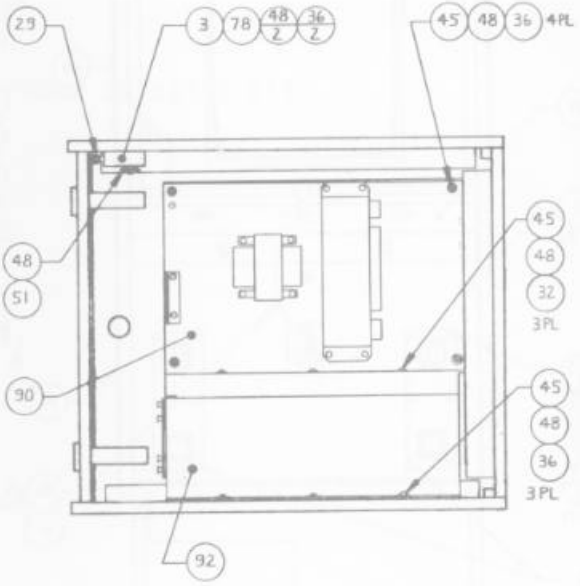

SECTION B-B

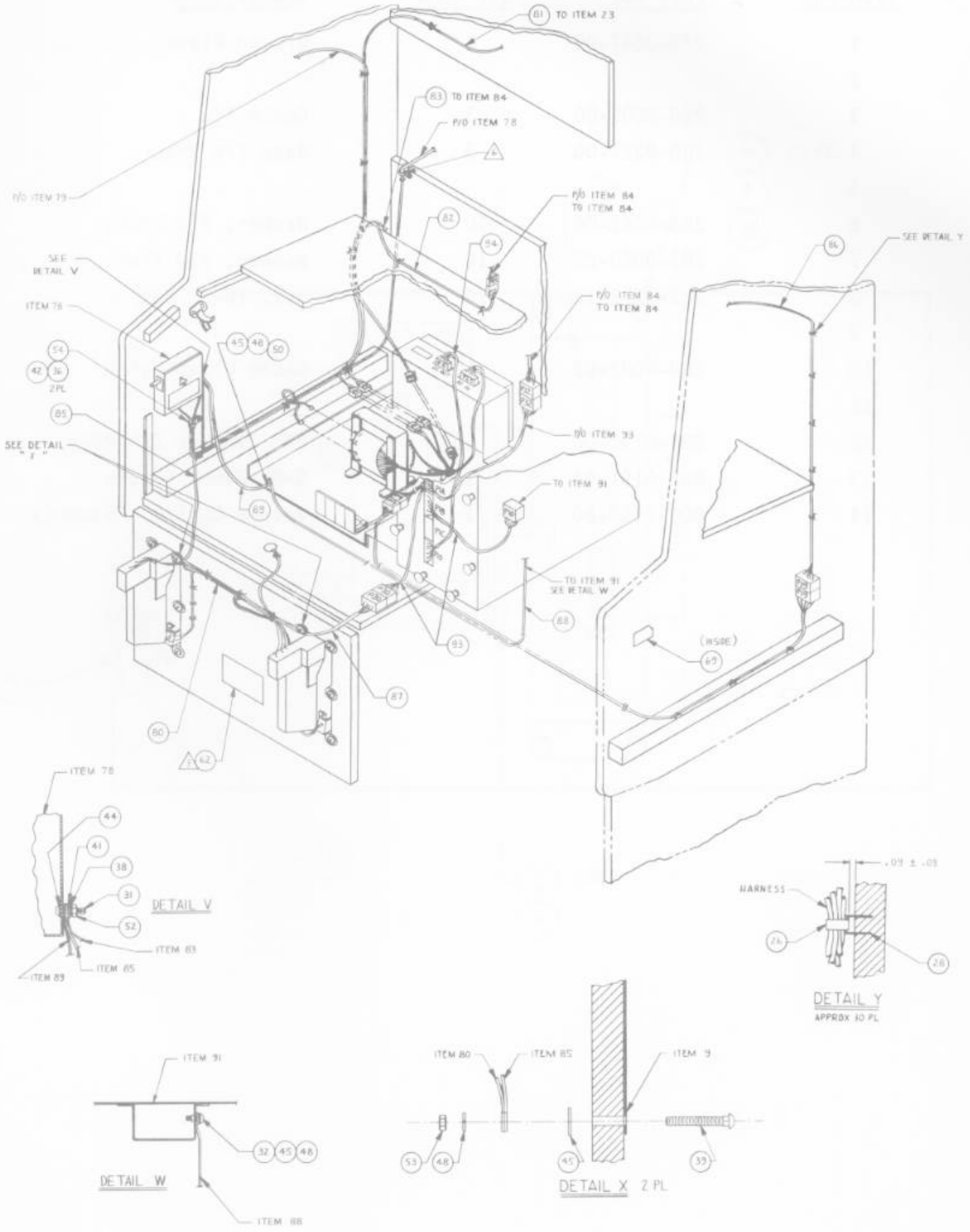
81 TO ITEM 23
83 TO ITEM 84
P/O ITEM 78
P/O ITEM 79
P/O ITEM 84
TO ITEM 84
SEE DETAIL V
ITEM 78
82
54
84
SEE DETAIL Y
P/O ITEM 84
TO ITEM 84
54
42 36
2PL
45 46 50
85
SEE DETAIL "Z"
P/O ITEM 93
TO ITEM 91
89
TO ITEM 91
SEE DETAIL W
88
93
(INSIDE)
69
87
60
62
ITEM 78
44
41
38
31
52
DETAIL V
ITEM 83
ITEM 85
ITEM 89
.09 ± .03
HARNESS
76
28
DETAIL Y
APPROX 10 PL
ITEM 91
32 45 48
DETAIL W
ITEM 88
ITEM 80
ITEM 85
ITEM 9
53 48
45
59
DETAIL X 2 PL

GROUND PLANE ASSEMBLY DRAWING NUMBER 800-0477

ITEM NO.	PART NO.	QTY REQD.	DESCRIPTION
1	250-0647-00	1	Ground Plane
2			
3	280-0005-00	3	Cable Tie
4	280-0327-00	3	Base Tie Wrap
5			
6	283-0061-06	10	Washer, #10 Lock.
7	283-0060-25	10	Washer, #10 Flat
8	283-0072-16	10	Nut, 10-32 Hex
9			
10	289-0002-02	1	Cable Clamp Nylon
11			
12	800-0190-00	1	EMI Xformer Assembly
13	800-0191-04	1	G-80 Power Supply
14	800-3350-00	1	Volume Control Assembly

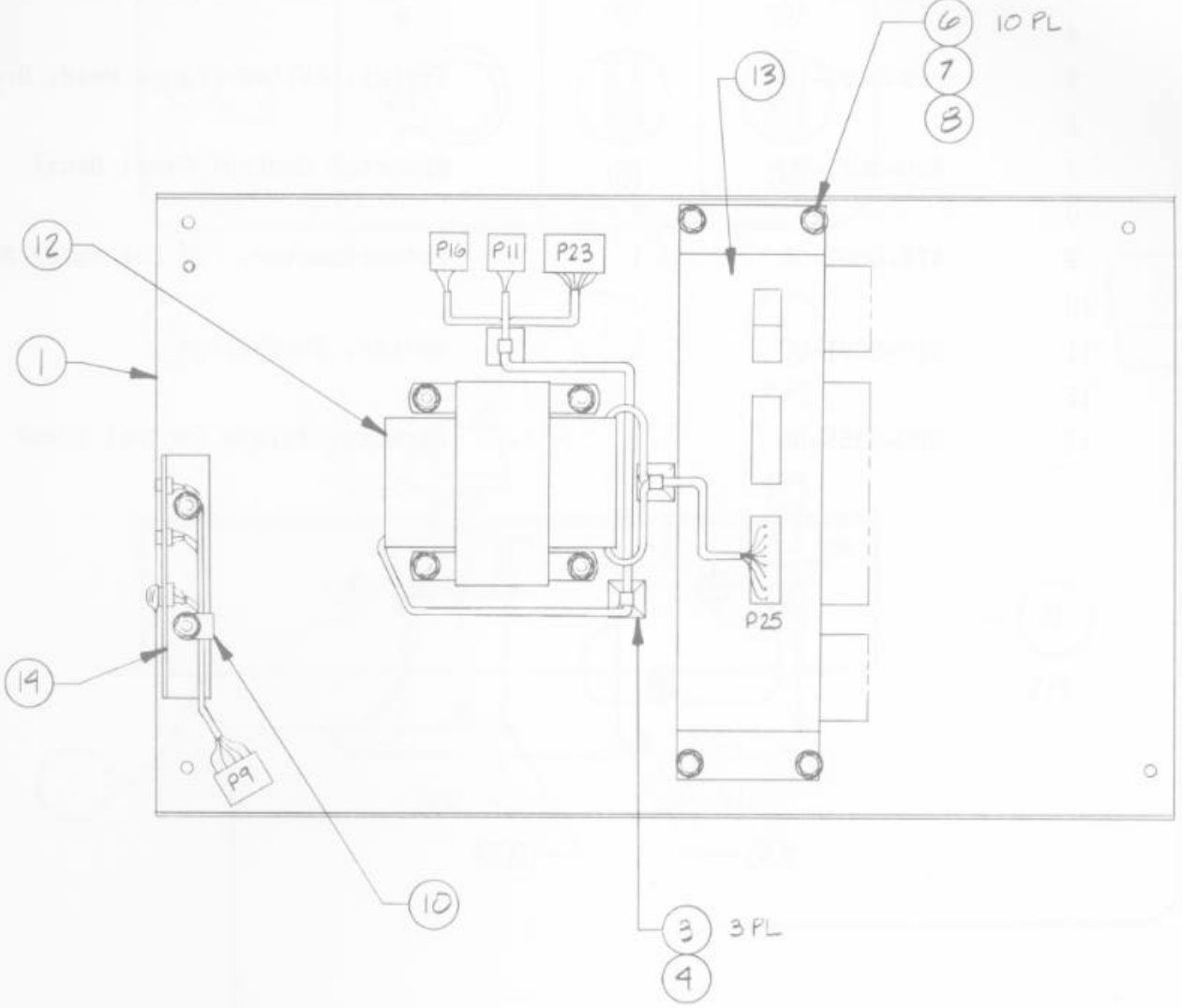
6
10 PL
7
8
13
12
1
P16
P11
P23
P25
14
P9
10
3
3 PL
4

VOLUME CONTROL BLOCK ASSEMBLY

DRAWING NUMBER 800-3350

ITEM NO.	PART NO.	QTY REQD.	DESCRIPTION
1	240-0001-00	1	Volume Control Knob
2			
3	250-0462-00	1	Volume Control Bracket
4			
5	289-0003-18	4	Eyelet, Rolled Flange Head, Brass
6			
7	420-0623-00	1	Operator Control Panel Decal
8			
9	475-0007-00	1	Potentiometer, 10K Car Panel Mnt.
10			
11	510-0051-00	2	Switch, Pushbutton
12			
13	800-3355-00	1	Harness, Volume Control Block

Volume Control Assembly

800-3350

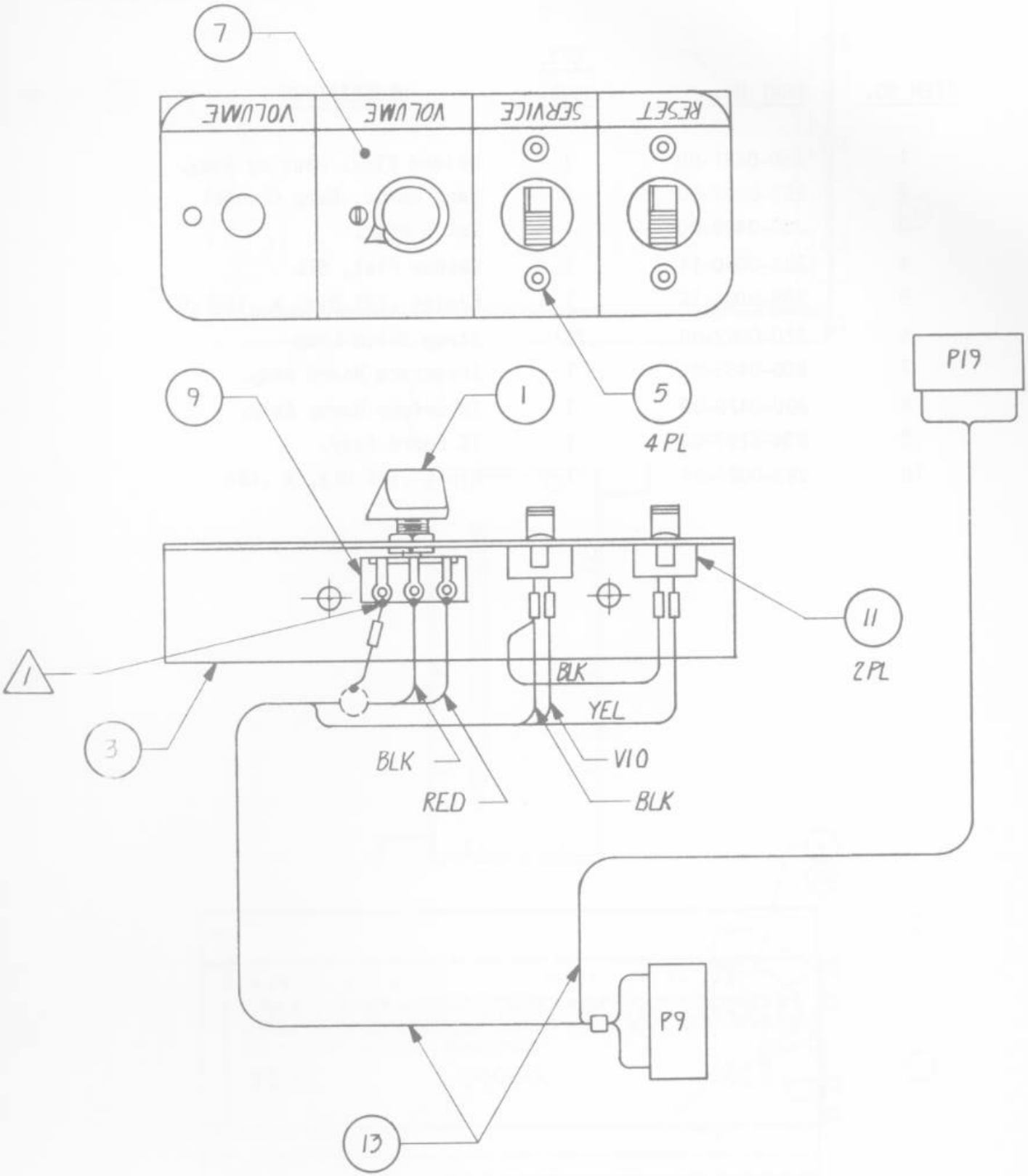

GAME ELECTRONICS ASSEMBLY

DRAWING NUMBER 800-3397

ITEM NO.	PART NO.	QTY. REQD.	DESCRIPTION
1	250-0621-00	1	Welded Elec. Housing Assy.
2	253-0309-00	8	Card Guide, Deep Channel
3	280-0499-00	1	Velco Disc.
4	283-0060-14	1	Washer Flat, STL
5	289-0003-16	1	Eyelet .121 Dia. x .187 LG
6	320-0062-00	.75'	Strap Velco Loop
7	800-0435-00	1	Interface Board Assy.
8	800-0479-00	1	Interface Harn. Assy.
9	834-5197-00	1	IC Board Assy.
10	283-0064-04	1	Rivet .125 Dia. x .187

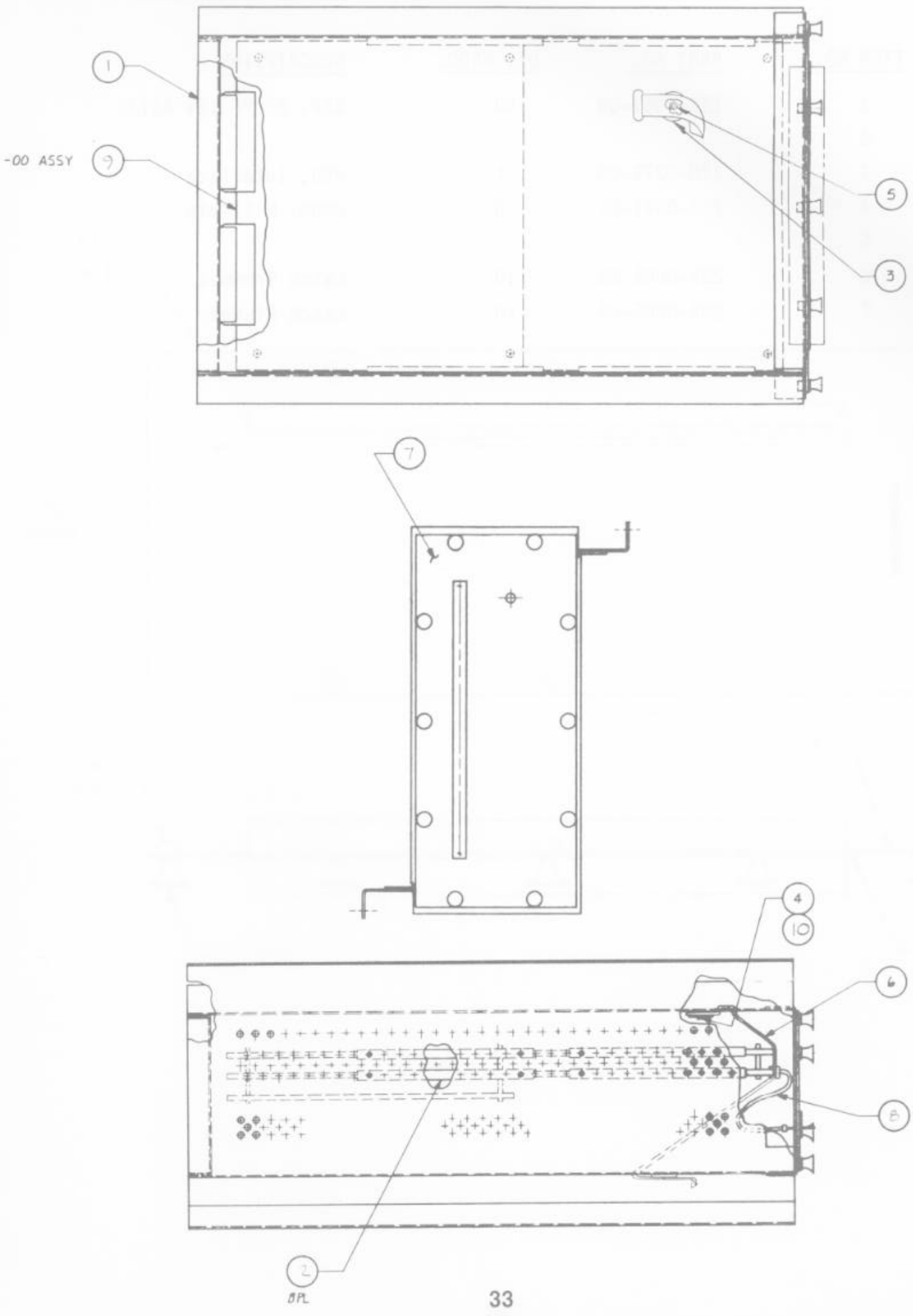
1
-00 ASSY
9
5
3
7
4
10
6
8
2
BPL

INTERFACE BOARD ASSEMBLY DRAWING NUMBER 800-0435

ITEM NO.	PART NO.	QTY REQD.	DESCRIPTION
1	151-0061-00	60	CAP, 220PF 16V AXIAL
2			
3	170-0275-00	1	PCB, Interface
4	212-0021-00	6	CONN. M 10-pin
5			
6	289-0005-05	10	Latch Grommet
7	289-0005-06	10	Latch Plunger

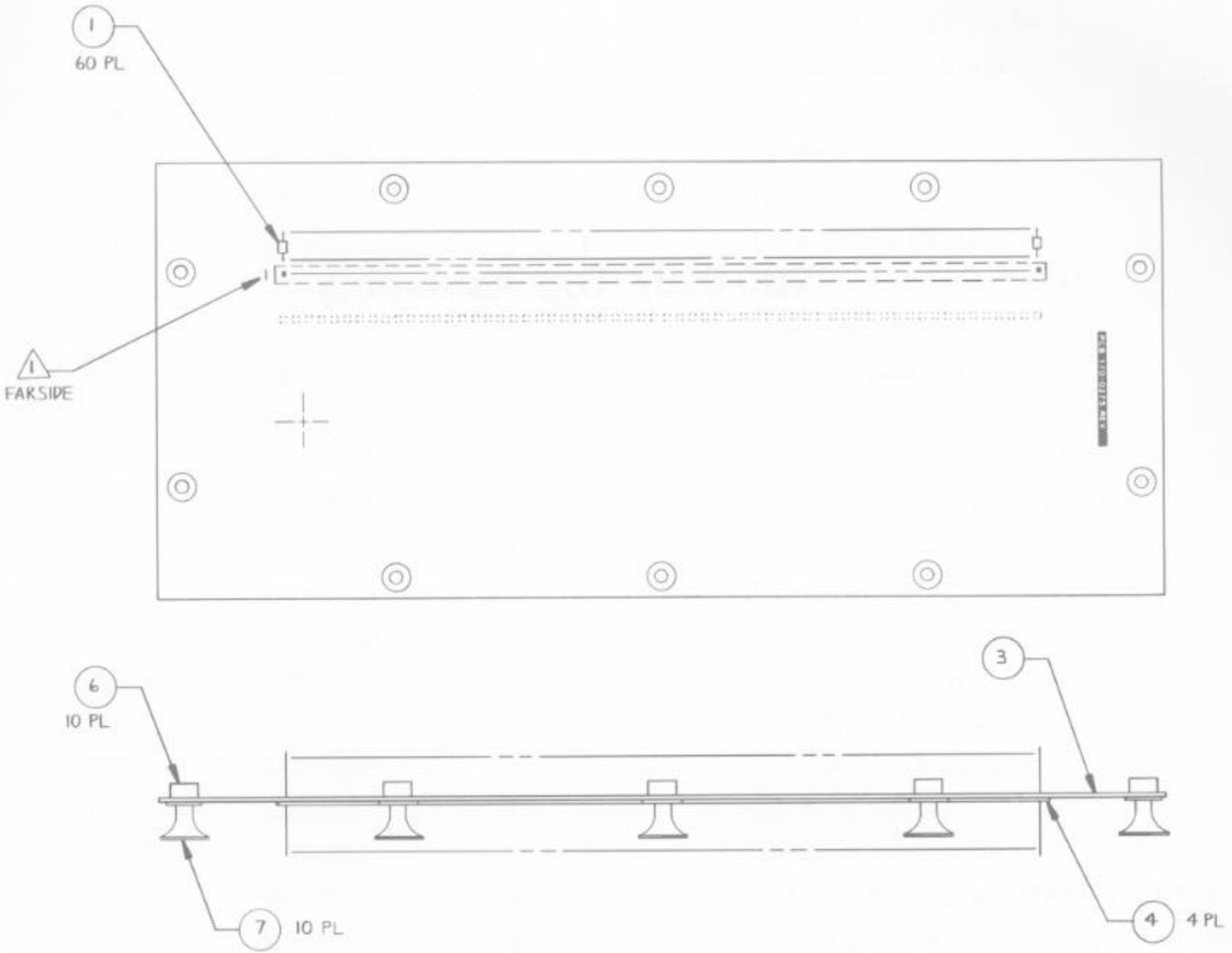
1
60 PL
1
FARSIDE
6
10 PL
3
7
10 PL
4
4 PL

700-0137 Top Assembly

TOP ASSEMBLY

DRAWING NUMBER 700-0137

ITEM NO.	PART NO.	QTY REQD. -00	QTY REQD. -01	DESCRIPTION
1	834-0327	1	1	T8 Cabinet Accessory Assy
2	220-0190	2	2	Lower Coin Chute
3	601-0662	1	1	CRT Mask, Grey Smoke
4	275-0078	1	1	Table Glass, Black
5	220-0191	1	1	Cash Box
8	601-0663	1	1	TV Mask
9	601-0664	2	2	Leg Assy
15	117-0169	1	1	Coin Entry Plate
16	420-1010	1	1	Play Instructions Decal
20	420-0755	1	1	Denomination Decal
22	117-0170	1	1	Speaker Guard Plate
23	601-0542	1	1	Hook
25	220-0084	2	2	Coin Chute, Rejector-type
30	117-0202	1	1	Denomination Plate, 25¢ X 2
	117-0171	1	1	Denomination Plate, 25¢
31	834-0125	1	1	Cable and Plug Assy
32	240-0120	2	2	Reject Button Assy
39	834-5165	1	1	Game Electronics Assy
40	200-0039	1	1	19" Color Monitor
102	509-0039	1	1	Switch, Push Button
103	420-0979	1	1	Owner's Manual
106	130-0017	1	1	Speaker, 8ohm, 3W
107	601-0444	1	1	C & R Combination Element, 0.1uf
108	509-0117	1	1	Switch, Illum. Yellow Push Button
109	601-0429	1	1	Noise Filter, AC 250V, 4A
111	420-1008	1	1	Volume Control Decal
	420-0982	1	1	DIP Switch Decal
	420-0914-07	1	1	Game Seal Decal
	420-0912	1	1	FCC Compliance Decal
	117-0234	1	1	Control Panel Overlay
	117-0204	-	1	8-Way Guide Plate
	250-0656	-	1	Bracket (WF-0001X)
	250-0657	-	1	Bracket (WF-0002)

TOP ASSEMBLY DRAWING NUMBER 700-0137

ITEM NO.	PART NO.	QTY REQD. -00	QTY REQD. -01	DESCRIPTION
	250-0658	-	1	Bracket (WF-0003)
	283-0072-07	6	-	Nut, 4-40 Hex
	283-0060-13	6	-	Washer, #4 Flat
	283-0061-02	6	-	Washer, #4 Lock
	211-0173-00	6	-	Shorting Clip

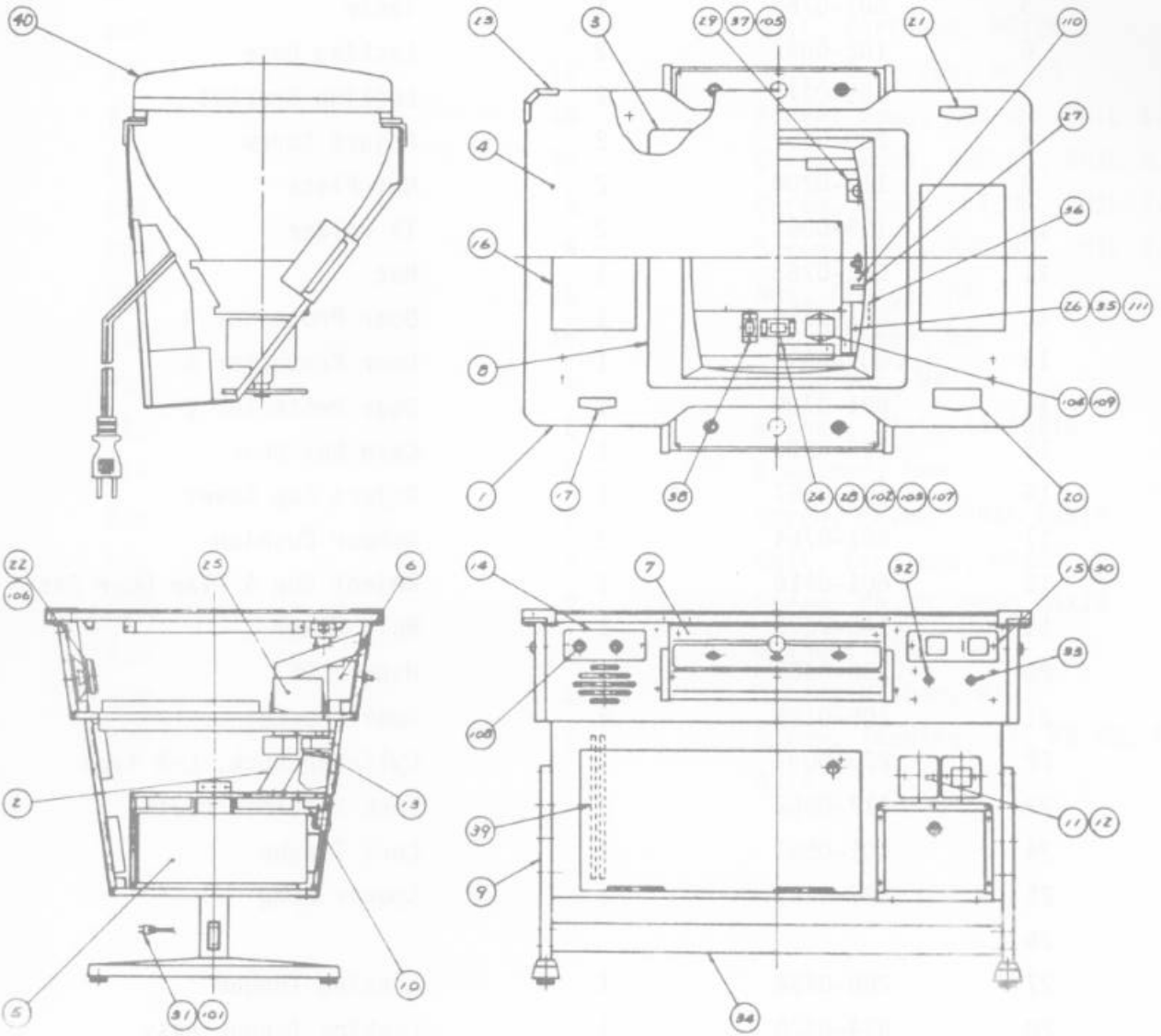
40
13
3
29
37
105
21
110
4
27
16
34
26
35
111
8
104
109
1
17
38
24
25
102
103
107
20
22
106
23
6
2
12
5
31
101
10
14
7
32
15
30
33
108
39
11
12
9
34

T8 CABINET ACCESSORY ASSEMBLY DRAWING NUMBER 834-0327

ITEM NO.	PART NO.	QTY REQD.	DESCRIPTION
1	140-0074	1	Wooden Cabinet, T8
2	601-0761	1	Service Door
3	280-0451	2	Hinge, 95
4	105-0275	2	Cabinet Support Bracket
5	601-0762	1	Table
6	102-0047	2	Locking Base
7	105-0276	2	Locking Bracket
8	280-0452	2	Adjust Screw
9	117-0200	2	Nut Plate
10	109-0057	2	TV Holder
11	601-0763	1	Net
12	601-0698	1	Door Protector A
13	601-0699	1	Door Protector B
14	601-0700	1	Door Protector C
15	220-0204	1	Cash Box Door
16	601-0657	1	Reject Cup Cover
17	601-0764	2	Rubber Cushion
18	601-0416	1	Reject Cup & Flap Door Assy
19	140-0075	2	Hole Cover
20	280-0405	2	Hinge, 95
21	105-0198	4	Hook Bracket
22	220-0097	1	Cylinder Lock, L-S type
23	117-0062	3	Lock Retainer Plate
24	601-0587	1	Lock Tongue
25	280-0453	1	Spacer Ring
26			
27	280-0454	1	Locking Tongue
28	834-0328	1	Locking Tongue Assy
29			
30	109-0058	1	Stay Holder
31	280-0463	2	Locking Tongue
32			
33	117-0201	1	Guard Plate

T8 CABINET ACCESSORY ASSEMBLY DRAWING NUMBER 834-0327

ITEM NO.	PART NO.	QTY REQD.	DESCRIPTION
101	601-0765	1	Stay
201		7	Screw, M4X10 PN.HD. PHIL
202		6	Screw, M5X10 PN.HD. PHIL
203		13	Bolt, Carriage, M4X20
204		4	Bolt, Carriage, M5X20
205		12	Bolt, Carriage, M5X25
206		44	Screw, Wood, RND.HD. PHIL 3.5X13
207		16	Screw, Wood, RND.HD. PHIL 3.5X16
208		4	Screw, Wood, FLT.HD. PHIL 3.5X13
209		4	Screw, Wood, RND.HD. PHIL 3.1X13
210		15	Nut, Flange, M4
211		16	Nut, Flange, M5
212		1	Onime Nut, M4
213		2	Washer, Flat, 44-16X16
214		2	E Washer, 5mm
215		2	Screw, PN.HD. PHIL M3X14
216		2	Bolt, Carriage, M4X25
217		2	Screw, PN.HD. PHIL M4X18
218		2	Washer, Flat, M4
219		2	Spring Washer, M4
220		1	Screw, Tapping, #1, PN.HD. PHIL 4X14

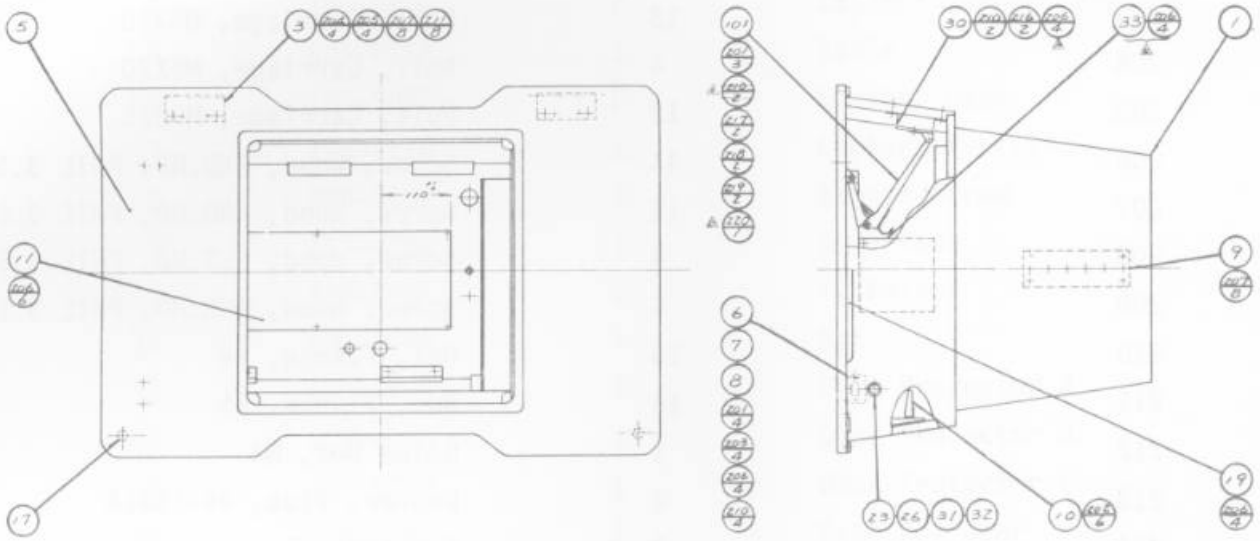

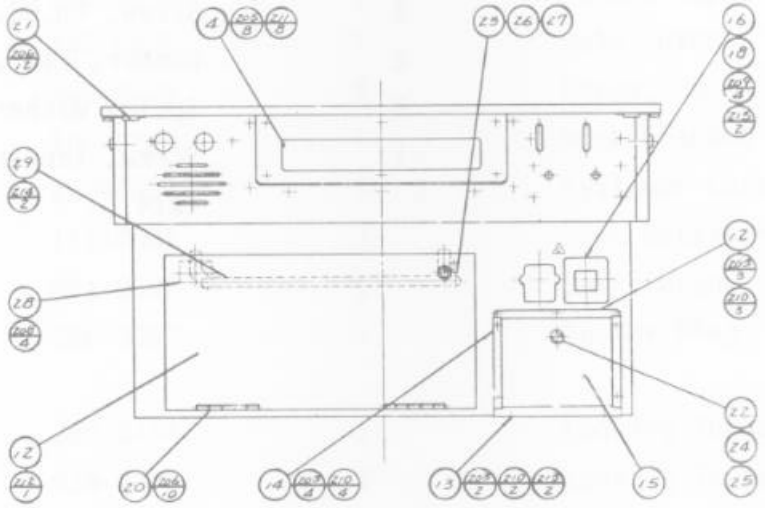

CONTROL PANEL ASSEMBLY DRAWING NUMBER 834-0330

ITEM NO.	PART NO.	DESCRIPTION
1	117-0203	Control Panel Plate
2	834-0331	8-Way Joystick Assembly
3	117-0164	Slider Plate
4		
5	102-0048	Control Panel Base, Upper
6	102-0049	Control Panel Base, Lower
7	601-0766	Ornament Board, A
8	601-0767	Ornament Board, B
101	109-0042	Handle Ball, Red
102	509-0146	Switch, Push Button, Red

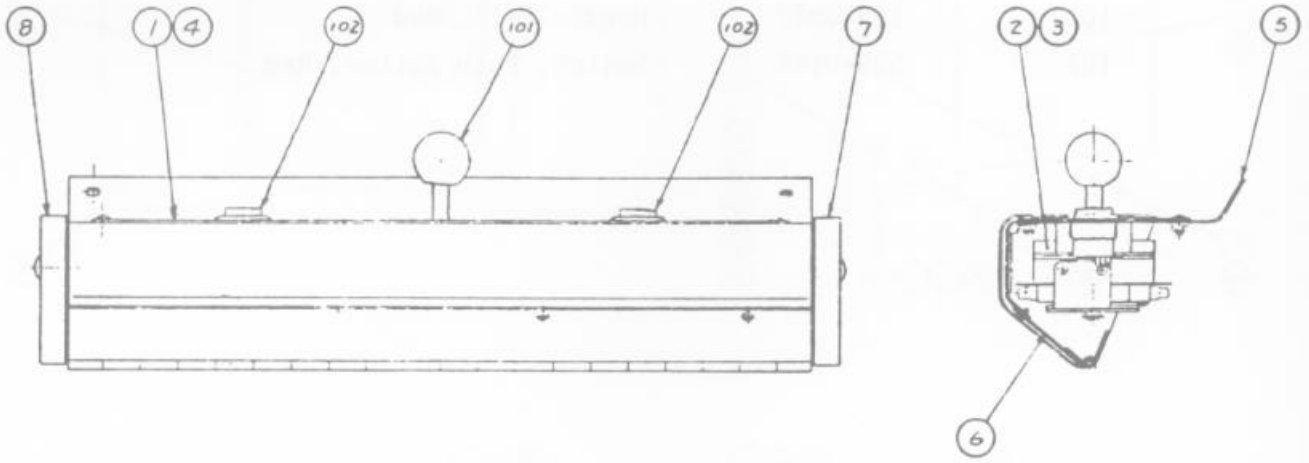
8
1
4
102
101
102
7
2
3
5
6

8-WAY JOYSTICK ASSEMBLY DRAWING NUMBER 834-0031

ITEM NO.	PART NO.	DESCRIPTION
1	105-0277	Bracket
2	117-0204	Guide Plate, 8-Way
3	834-0332	Handle Assembly
4	601-0768	Sleeve
5	125-0102	Compression Spring
6	104-0007	Actuator
7	834-0333	Bracket w/Bearing Assembly
8		
9	117-0164	Slider Plate
10	280-0455	Plastic Washer
101	509-0131	Switch, Micro-type

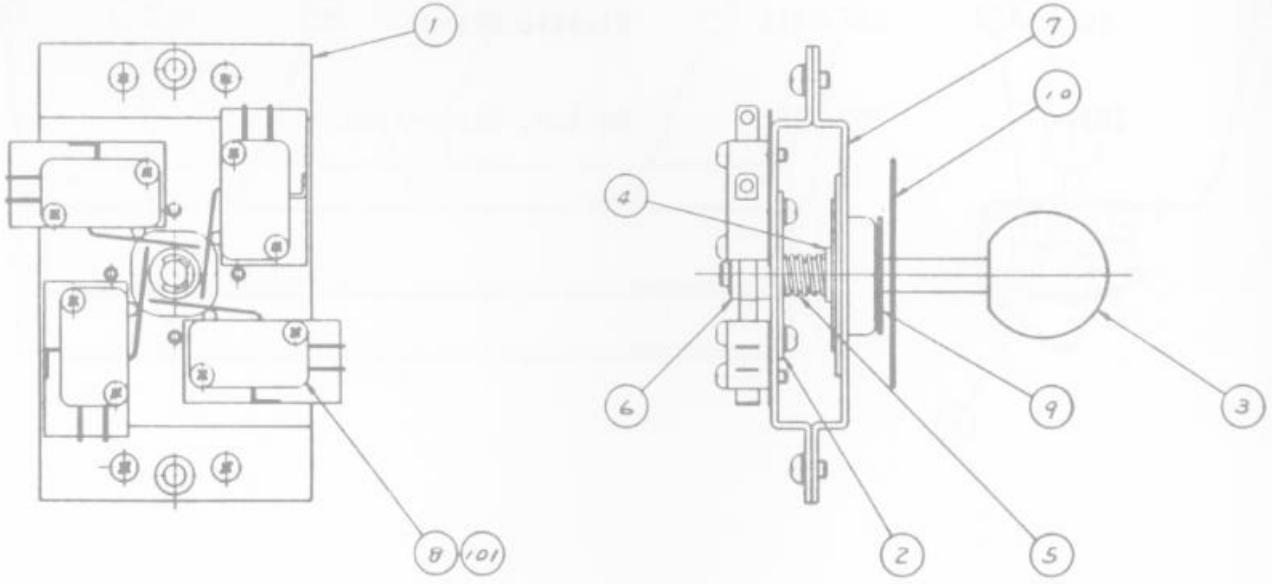
1
8
10
7
10
4
6
9
3
2
5

POWER SUPPLY ASSEMBLY DRAWING NUMBER 834-0340

ITEM NO.	PART NO.	DESCRIPTION
1		
2	601-0612	Regulator Unit
3		
4		
5	560-0067	Power Transformer, 90-240VAC
102	601-0158	Switching Regulator, 100VAC, 5V 6A
103	509-0115	Switch Toggle, SP-DT, 15A
105	514-0046	Fuse Holder, 1P, 125V 10A
106	514-0045	Fuse Holder, w/Cover 250V 10A
107	514-0033	Fuse, 1A
108	514-0002	Fuse, 3A
109	514-0034	Fuse, 5A

Power Supply Assembly

834-0340

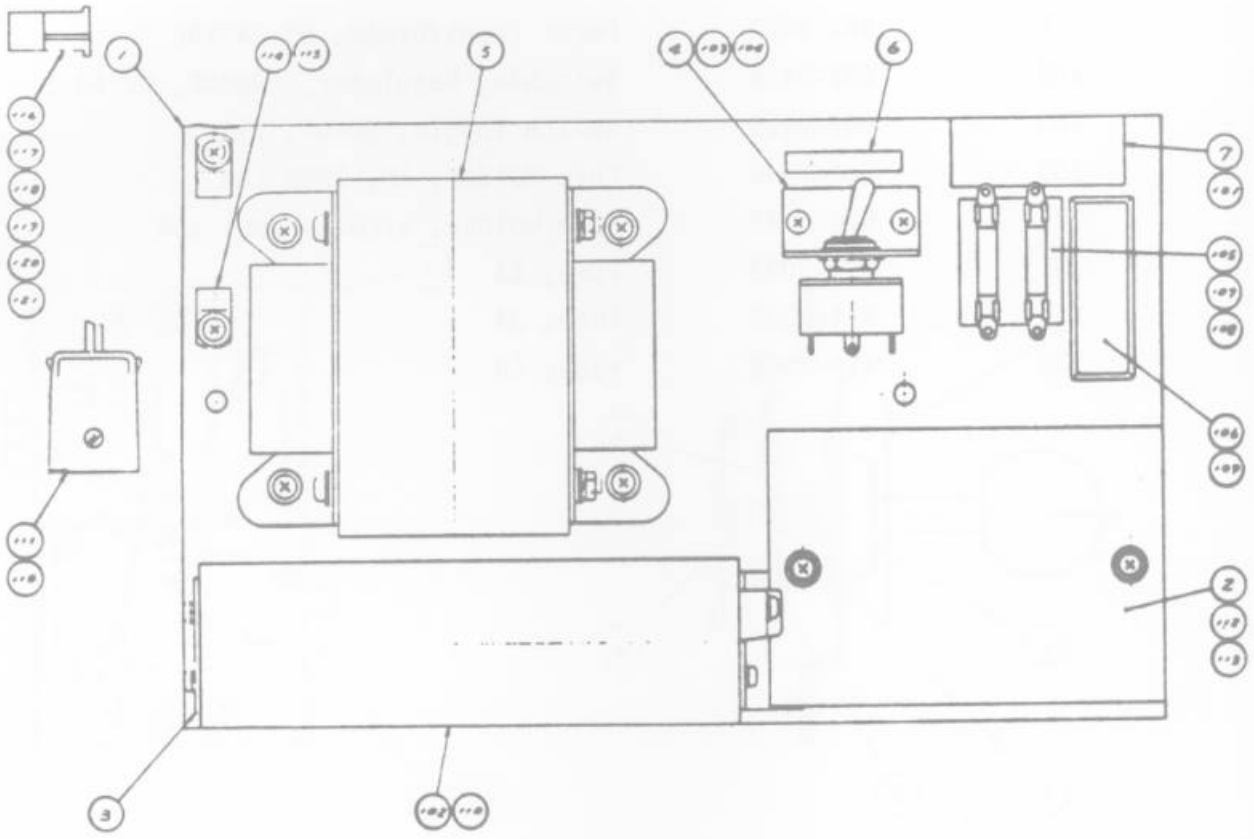

REGULATOR UNIT

DRAWING NUMBER 601-0612

ITEM NO.	PART NO.	DESCRIPTION
1	312-0070	IC, uA 78M12UC
2	313-0014	IC, uA 7812UC
3	312-0042	IC, uA 7805UC
4	481-0042	Rectifier, Silicon Diode
5	481-0065	Rectifier, Silicon Diode
6	481-0049	Rectifier, Silicon Diode
7	150-0008	Condenser, 2200uf, 25V
8	150-0182	Condenser, 3300uf, 25V, CE04
9	150-0206	Condenser, 3300uf, 16V, CE04
10	153-0002	Condenser, 1uf, 25V, Solid Tantalum
11	151-0041	Condenser, 0.1uf, 25V, Ceramic
12	470-0332	Resistor, 3.3K, ¼W, Solid Type
13	150-0154	Condenser, 470uf, 25V, CE04

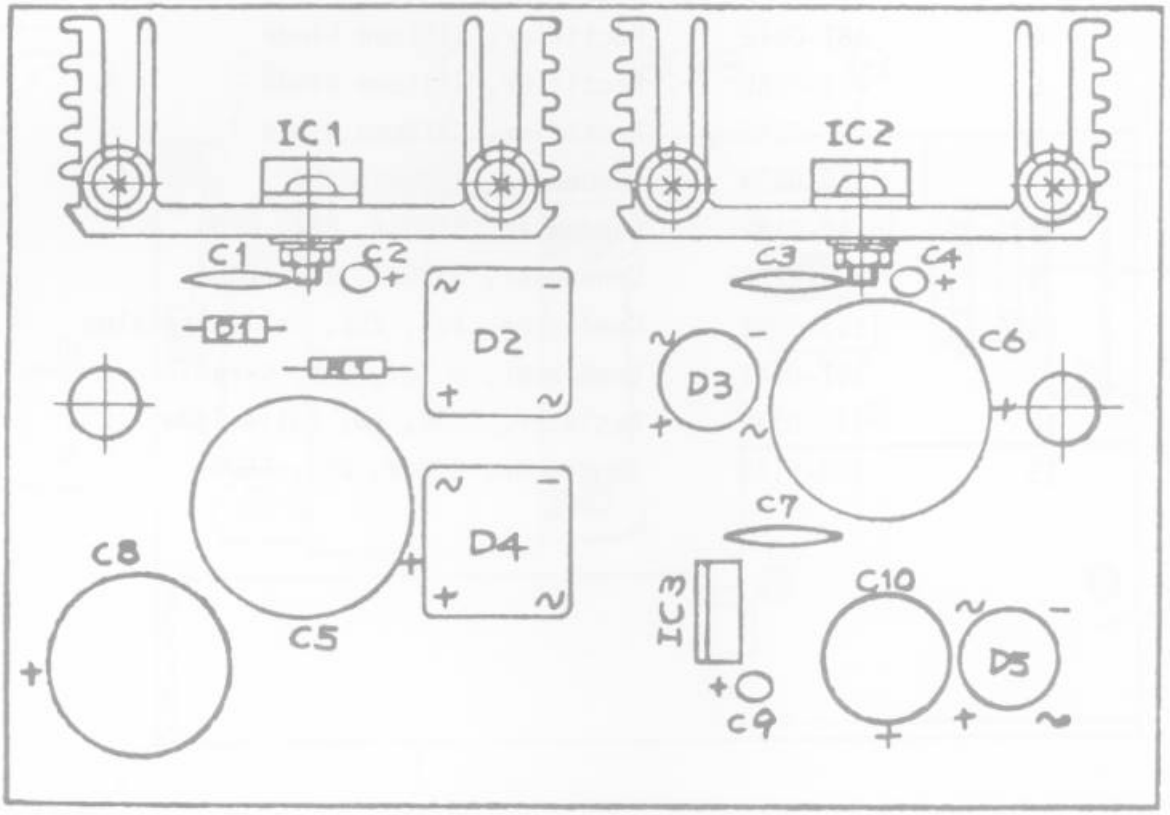
IC1
IC2
C1
C2
C3
C4
D1
D2
D3
C6
C7
D4
C8
C5
IC3
C10
D5
C9

PCB ASSEMBLY

Part No.	Description	Ref Des.
Resistors	R carbon 1/4 sb 680 Ohm	R101
	R carbon 1/4 sb 680 Ohm	R102
	R carbon 1/4 sb 2.2k Ohm	R103
	R carbon 1/4 sb 390 Ohm	R104
	R carbon 1/4 sb 2.2k Ohm	R105
	R carbon 1/4 sb 390 Ohm	R106
	R carbon 1/4 sb 1K Ohm	R107
	R carbon 1/4 sb 680 Ohm	R111
	R carbon 1/4 sb 780 Ohm	R112
	R carbon 1/4 sb 15K Ohm	R113
	R carbon 1/4 sb 390 Ohm	R114
	R carbon 1/4 sb 2.2K Ohm	R115
	R carbon 1/4 sb 390 Ohm	R116
	R carbon 1/4 sb 1K Ohm	R117
	R carbon 1/4 sb 680 Ohm	R121
	R carbon 1/4 sb 680 Ohm	R122
	R carbon 1/4 sb 390 Ohm	R124
	R carbon 1/4 sb 2.2K Ohm	R125
	R carbon 1/4 sb 390 Ohm	R126
	R carbon 1/4 sb 1K Ohm	R127
	R carbon 1/4 sb 10K Ohm	R401
	R carbon 1/4 sb 8.2K Ohm	R402
	R carbon 1/4 sb 3.3K Ohm	R403
	R carbon 1/4 sb 8.2K Ohm	R404
	R carbon 1/2 sb 270 Ohm	R405
	R carbon 1/4 sb 10K Ohm	R406
	R carbon 1/4 sb 680 Ohm	R407
	R carbon 1/4 sb 2.2K Ohm	R408
	R carbon 1/4 sb 12K Ohm	R409
	R carbon 1/4 sb 10K Ohm	R410

Part No.	Description	Ref Des.
Resistors (cont)	R fuseable FMR1/4W 100 Ohm	R413
	R carbon 1/4 sb 2.2K Ohm	R414
	R metal 10K Ohm	R415
	R fuseable FMR1/4C 22 Ohm	R416
	R cement RGB10H(V) 220 Ohm	R417
	R metal 4.7K Ohm	R418
	R carbon 1/2 sb 2.2K Ohm	R419
	R carbon 1/4 sb 68K Ohm	R421
	R carbon 1/4 sb 6.8 Ohm	R422
	R carbon 1/4 sb 470 Ohm	R423
	R fuseable FMR1/4W	R424
	R carbon 1/2 sb 390 Ohm	R425
	R carbon 1/4 sb 6.8K Ohm	R426
	R fuseable FMR1/2W 1.2 Ohm	R427
	R fuseable FMR2W 1.2 Ohm	R428
	R carbon 1/4 sb 330 Ohm	R501
	R carbon 1/4 sb 10K Ohm	R502
	R carbon 1/4 sb 10K Ohm	R504
	R carbon 1/4 sb 27k Ohm	R505
	R carbon 1/4 sb 390K Ohm	R506
	R carbon 1/4 sb 18K Ohm	R507
	R carbon 1/4 sb 68K Ohm	R508
	R carbon 1/4 sb 6.8K Ohm	R509
	R carbon 1/4 sb 10K Ohm	R510
	R carbon 1/4 sb 1.2K Ohm	R511
	R carbon 1/4 sb 470 Ohm	R512
	R metal RNL1/4 3.3K Ohm	R513
	R metal RNL1/4 560K Ohm	R514
	R metal 6.8K Ohm	R515
	R carbon 1/2 sb 8.2K Ohm	R516
	R metal 3.3K Ohm	R517
	R carbon 1/4 sb 8.2K Ohm	R518

Part No.	Description	Ref Des.
Resistors (cont)	R carbon 1/2 sb 4.7K Ohm	R519
	R carbon 1/2 sb 33 Ohm	R520
	R carbon 1/4 sb 10K Ohm	R521
	R fuseable FMR1/4W 330 Ohm	R522
	R fuseable FMR1/4W 330 Ohm	R523
	R fuseable FMR1/4W 330 Ohm	R524
	R fuseable FMR1/2 4.7 Ohm	R525
	R carbon 1/4 sb 22K Ohm	R527
	R carbon 1/4 sb 22K Ohm	R528
	R carbon 1/4 sb 680 Ohm	R529
	R carbon 1/4 sb 4.7K Ohm	R530
	R carbon 1/4 sb 470 Ohm	R531
	R carbon 1/4 sb 680 Ohm	R532
	R carbon 1/4 sb 47 Ohm	R533
	R fuseable FMR1/4W 330 Ohm	R901
	R carbon 1/4 sb 47K Ohm	R902
	R fuseable FMR1/4W 68 Ohm	R903
	R metal 15K Ohm	R904
	R carbon 1/4 sb 1M Ohm	R905
	R carbon 1/4 sb 15K Ohm	R906
	R carbon 1/4 sb 68K Ohm	R907
	R carbon 1/4 sb 68K Ohm	R908
	R carbon 1/4 sb 4.7K Ohm	R909
	R variable V8K4-1 5K Ohm	RV101
	R variable V8K4-1 5K Ohm	RV102
	R variable V8K4-1 5K Ohm	RV103
	R variable V8K4-1 5K Ohm	RV104
	R variable RVA0911H320-7-502M	RV404
	R variable RVG0911H320-7-303M	RV402
	R variable RVA0911H320-7-501M	RV403
	R variable RVA0911H320-7-302M	RV501
	R variable RVG0911H320-7-303M	RV502

Part No.	Description	Ref Des.
Resistors (cont)	R variable RVG0911H320-7-303M	RV503
Capacitors		
	C electro CE04 16V100(M)	C101
	C electro CE04 50V 1(M)	C401
	C polyester DEP50V 333K	C402
	C polyester DEP50V 333K	C403
	C tantal D 16V 2.2 uf K	C404
	C ceramic DD104-63B561K50V	C405
	C electro CE04 16V 470 (M)	C406
	C electro CE04 25V 10 (M)	C407
	C tantal D 25 10 uf K	C408
	C electro CE04 100V 10 (M)	C409
	C electro CE04 50V 1 (M)	C410
	C electro CE04 35V 220 (M)	C411
	C electro CE04 63V 470 (M)	C412
	C electro CE04 16V 470 (M)	C413
	C electro CE04 25V 10 (M)	C414
	C ceramic DD09]63B222K500V	C415
	C electro CE04 100V 10 (M)	C416
	C electro CE04 35V 220 (M)	C417
	C electro CE04 160V 22 (M)	C418
	C ceramic DD09-63B222K500V	C419
	C electro CE04 25V 10 (M)	C501
	C electro CE04 25V 10 (M)	C502
	C electro CE04 50V 1 (M)	C503
	C ceramic DD105-63E222P50V	C504
	C electro CE04 50V 1 (M)	C505
	C polyester DEP 50V 473K	C506
	C polyester DEP 50V 473K	C507
	C polypro DTW100V 562-G	C508
	C electro CE04 50V 1 (M)	C510
	C electro CE04 16V 220 (M)	C511

Part No.	Description	Ref Des.
Capacitors (Cont)	C ceramic DD05-63B561K500V	C512
	C ceramic DD10 63E472P500V	C513
	C ceramic DE1510R 222K	C514
	C ceramic DE1510R 222K	C515
	C ceramic DE1410R 182K	C516
	C ceramic DE1110R 821K	C517
	C ceramic DD104-63B821K 50V	C518
	C polipro DTW200VDC 0.47 uf M	C520
	C electro CE04 50V 47 (M)	C523
	C electro CE04 160V 47 (M)	C524
	C ceramic DD09-63B222K500V	C525
	C electro CE04 160V 1 (M)	C526
	C electro CE04 160V 10 (M)	C527
	C ploripro DTW630VDC 0.01 uf - M	C528
	C electro CE04 25V 10 (M)	C529
	C polypro UL LHX125VAC 0.1 uf	C901
	C ceramic MVDE0807E222ZAC250V	C902
	C ceramic MVDE0807E222ZAC250V	C903
	C ceramic DD09-63B 22K 500V	C904
	C electro RPE 180V (30o) 680 (M)	C905
	C electro CE04 160V 22 (M)	C906
	C ceramic DD05-63B 221K 500V	C907
Coils		
180-0033	L choke	L401
181-0034	L choke	L501
180-0032	L choke	L502
181-0033	L linear	L503
181-0032	L size	L504
180-0031	L choke	L505
180-0030	L choke	L506
180-0029	L choke	L507
180-0028	L choke	L901

Part No.	Description	Ref Des.
180-0027	L choke	L902
180-0026	L choke	L903
Transformers		
560-0102	T H drive	T501
560-0101	T pin corr	T502
560-0100	T FBT MSH1FAC02	T503
Diodes		
481-0164	Diode 1S1588	D101
481-0164	Diode 1S1588	D102
481-0164	Diode 1S1588	D103
481-0164	Diode 1S1588	D104
481-0164	Diode 1S1588	D105
481-0164	Diode 1S1588	D106
481-0164	Diode 1S1588	D401
481-0234	Diode 1S1886	D402
481-0175	Diode 1S2076A	D403
481-0119	Diode RU2	D404
481-0233	Diode EQA01-24	D405
481-0164	Diode 1S1588	D501
481-0137	D zener EQA01-07S	D502
481-0164	Diode 1S1588	D504
481-0175	Diode 1S2076A	D505
481-0175	Diode 1S2067A	D506
481-0119	Diode RU2	D507
481-0232	Diode S5295G	D508
481-0164	Diode 1S1588	D509
481-0232	Diode S5295G	D510
481-0164	Diode 1S1588	D511
481-0137	Diode EQA01-07S	D512
481-0235	D bridge 3D4B41	D901
481-0119	Diode RU2	D902
481-0137	D zener EQA01-07S	D904

Part No.	Description	Ref Des.
481-0137	D zener EQA01-07S	D905
Transistors		
482-0261	Transistor 2SC1740	Q101
482-0261	Transistor 2SC1740	Q102
482-0261	Transistor 2SC1740	Q103
482-0261	Transistor 2SC1740	Q104
482-0261	Transistor 2SC1740	Q105
482-0261	Transistor 2SC1740	Q106
482-0111	Transistor 2SA673	Q107
Miscellaneous		
	Connector	CN201
	Connector	CN202
	Connector	CN203
	Assy accord	CD901
	Connector	CN901
510-0068	Switch SSA042	SW1
510-0068	Switch SSA042	SW2
	Pin terminal	TP1
	Pin terminal	TP2
	Pin terminal	TP3
	Pin terminal	TP4
Transistors		
482-0276	Transistor 2SD1138	Q401
482-0276	Transistor 2SD1138	Q402
482-0261	Transistor 2SC1740	Q501
482-0257	Transistor 2SC2688	Q502
482-0198	Transistor 2SD870	Q503
482-0201	Transistor 2SD763	Q504
482-0201	Transistor 2SD763	Q505
482-0111	Transistor 2SA673	Q506
482-0111	Transistor 2SA673	Q507
	Transistor 2SC2555	Q901

Part No.	Description	Ref. Des.
482-0273	Transistor 2SA1091	Q902
482-0167	Transistor 2SC2482	Q903
482-0167	Transistor 2SC2482	Q904
Miscellaneous		
313-0051	I C HA11235	IC401
	Connector	CN101
	Connector	CN102
	Fuse	F901
	Fuse clip	CF901
	Fuse	
	Fuse clip	
	Shield case	
560-0098	Assy tr (v-out)	
560-0099	Assy tr (h-out)	
200-0081	Assy radiator A	
	NECK BOARD PCB	
Resistors		
	R carbon 1/4 sb 220 Ohm	R301
	R carbon 1/4 sb 220 Ohm	R302
	R carbon 1/4 sb 220 Ohm	R303
	R carbon 1/4 sb 1.2K Ohm	R304
	R carbon 1/4 sb 1.2K Ohm	R305
	R carbon 1/4 sb 1.2K Ohm	R306
	R carbon 1/4 sb 330 Ohm	R307
	R carbon 1/4 sb 330 Ohm	R308
	R carbon 1/4 sb 330 Ohm	R309
	R metal 8.2K Ohm	R310
	R metal 8.2K Ohm	R311
	R metal 8.2K Ohm	R312
	R solid 1/2 2.2K Ohm	R313
	R solid 1/2 2.2K Ohm	R314
	R solid 1/2 2.2K Ohm	R315

Part No.	Description	Ref. Des.
Resistors (cont)	R solid 1/2 1M Ohm	R316
	R variable RVA0911H-306-1 5K Ohm	RV301
	R variable RVA0911H-306-2 5K Ohm	RV302
	R variable RVA0911H-306-3 5K Ohm	RV303
	R variable RVA0911H-306-7 220 Ohm	RV304
	R variable RVA0911H-306-7 220 Ohm	RV305
Capacitors		
	C ceramic DD104-63B 271K 50V	C304
	C ceramic DD104-63B 271K 50V	C305
	C ceramic DD104-63B 271K 50V	C306
	C ceramic DE0705-B 102K 1KV	C309
Transistors		
482-0257	Transistor 2SC2688	Q301
482-0257	Transistor 2SC2688	Q302
482-0257	Transistor 2SC2688	Q303

ASSY MAIN PC BOARD, NANAO-200 0039

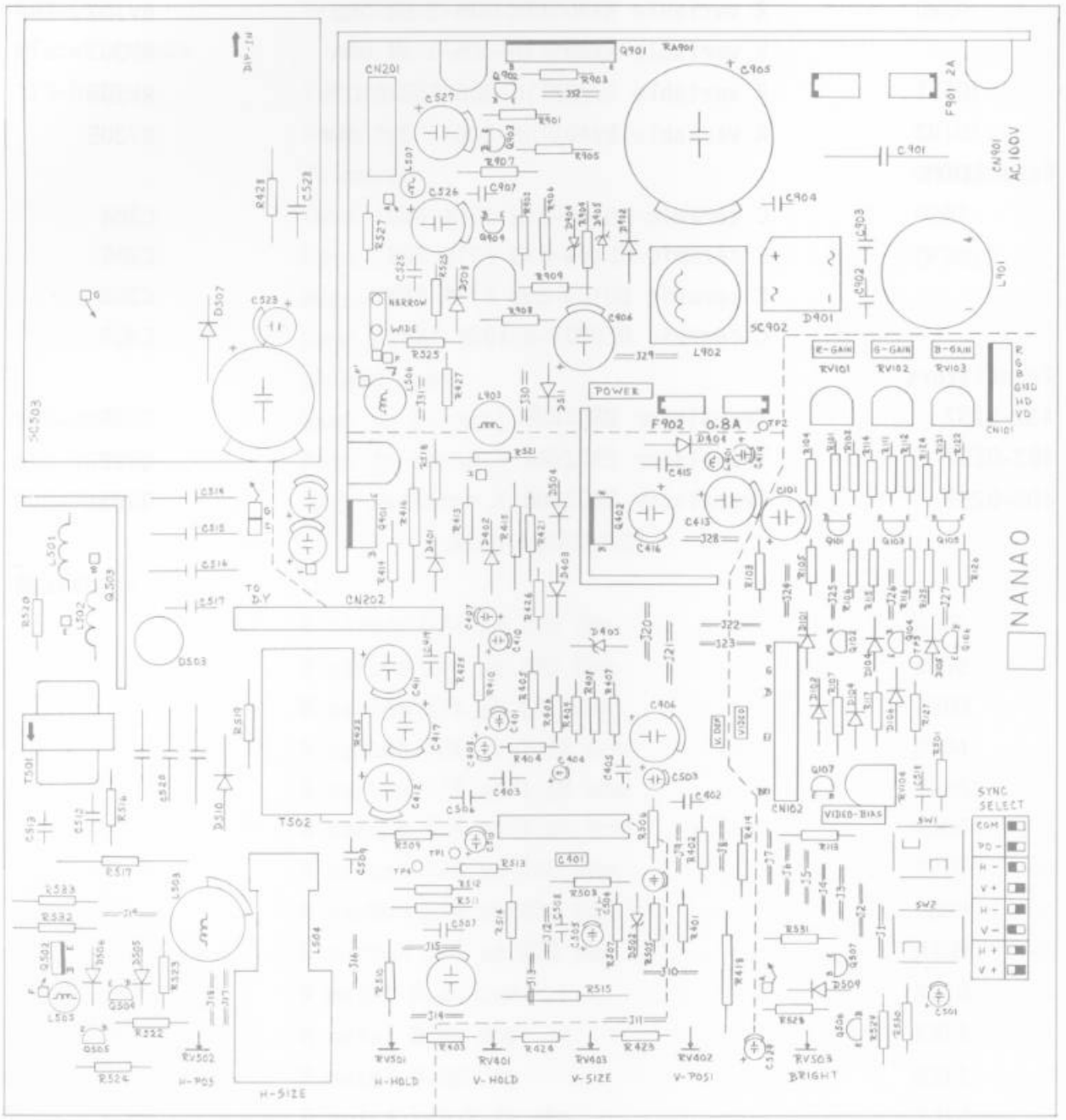

ASSY, NECKBOARD
NANAO 200 0039

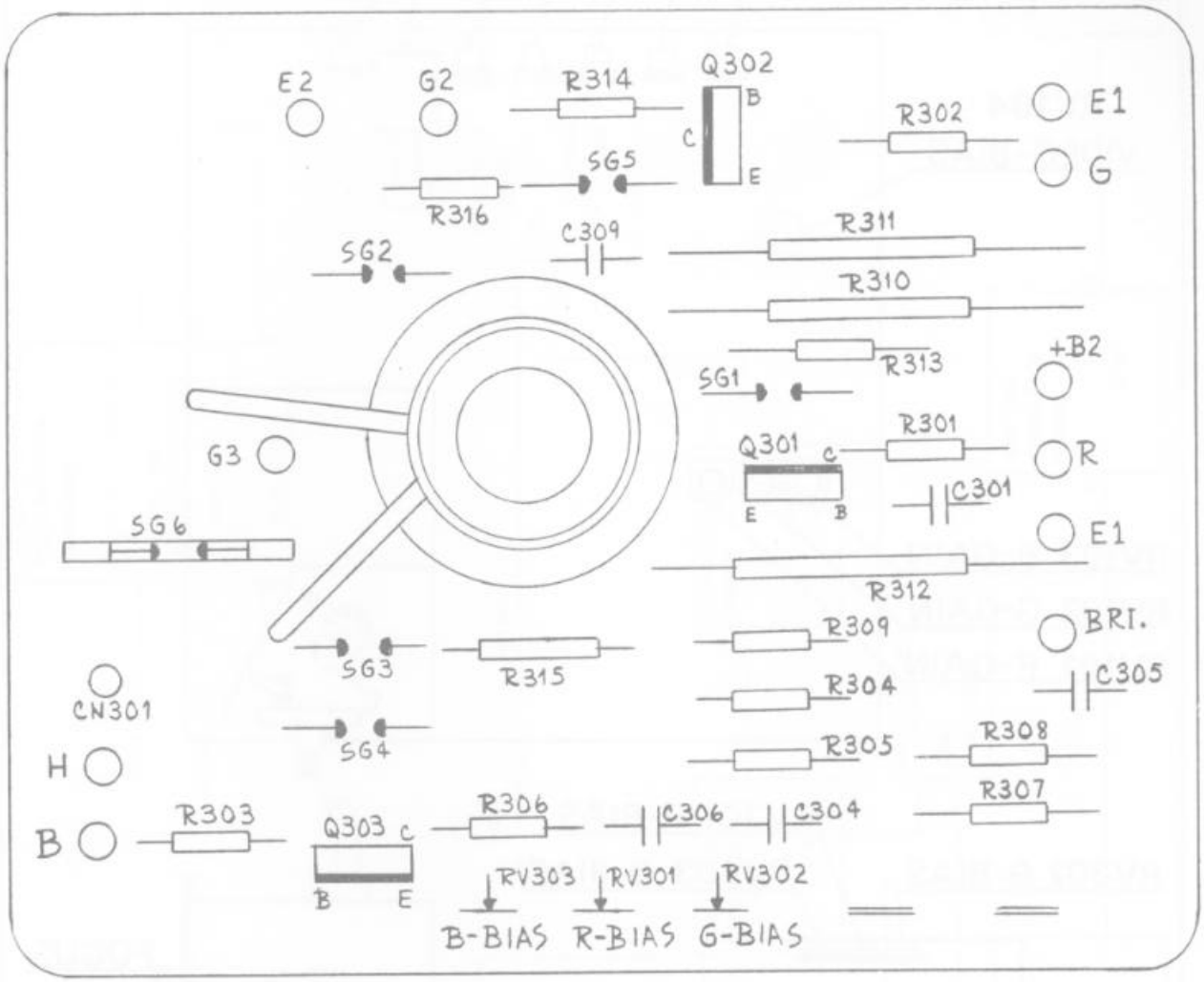

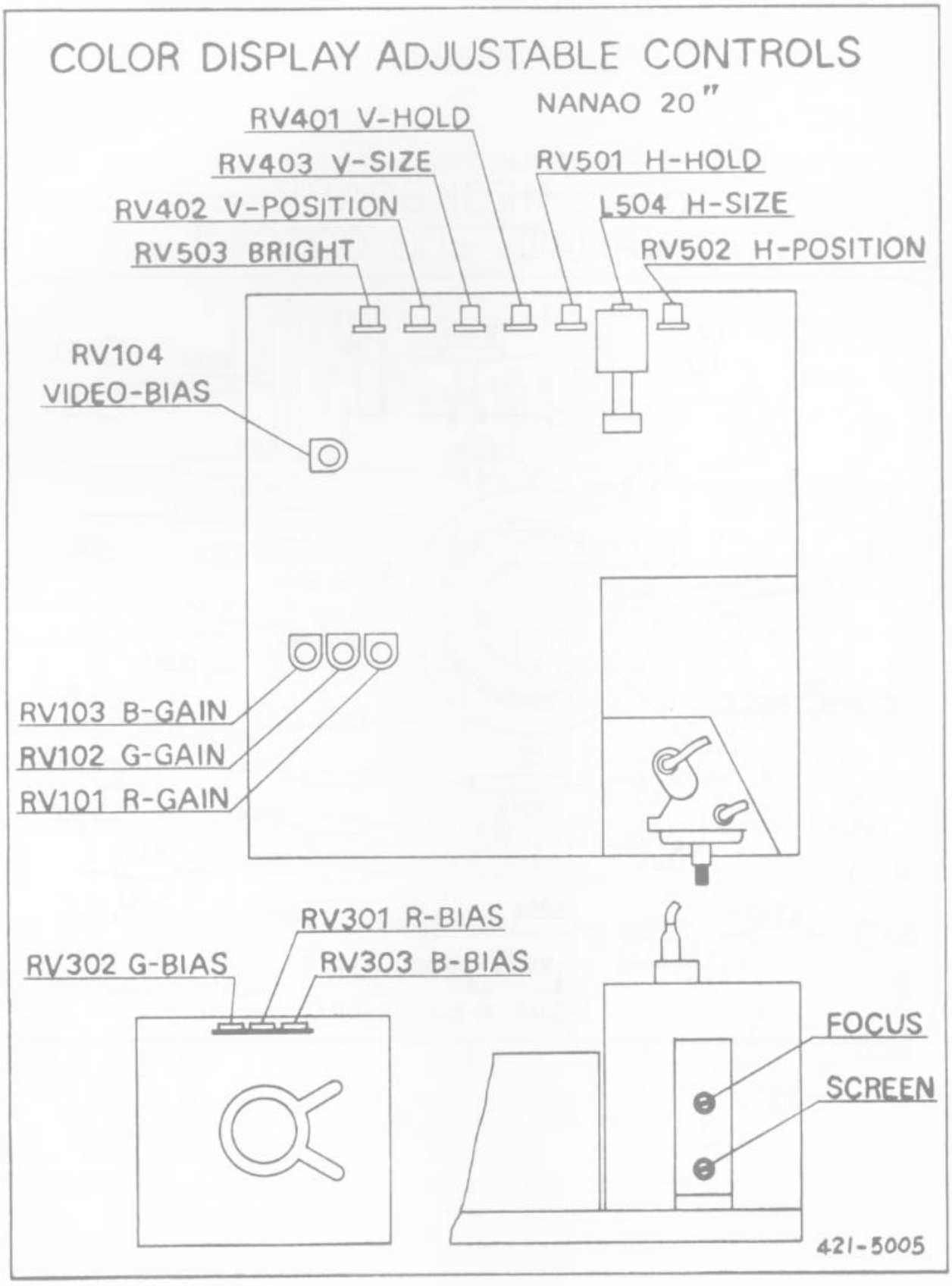
COLOR DISPLAY ADJUSTABLE CONTROLS
NANAO 20"
RV401 V-HOLD
RV403 V-SIZE
RV402 V-POSITION
RV503 BRIGHT
RV501 H-HOLD
L504 H-SIZE
RV502 H-POSITION
RV104
VIDEO-BIAS
RV103 B-GAIN
RV102 G-GAIN
RV101 R-GAIN
RV301 R-BIAS
RV302 G-BIAS
RV303 B-BIAS
FOCUS
SCREEN
421-5005

NANAO MC-2000S
FUNCTIONAL BLOCK DIAGRAM
200-0039

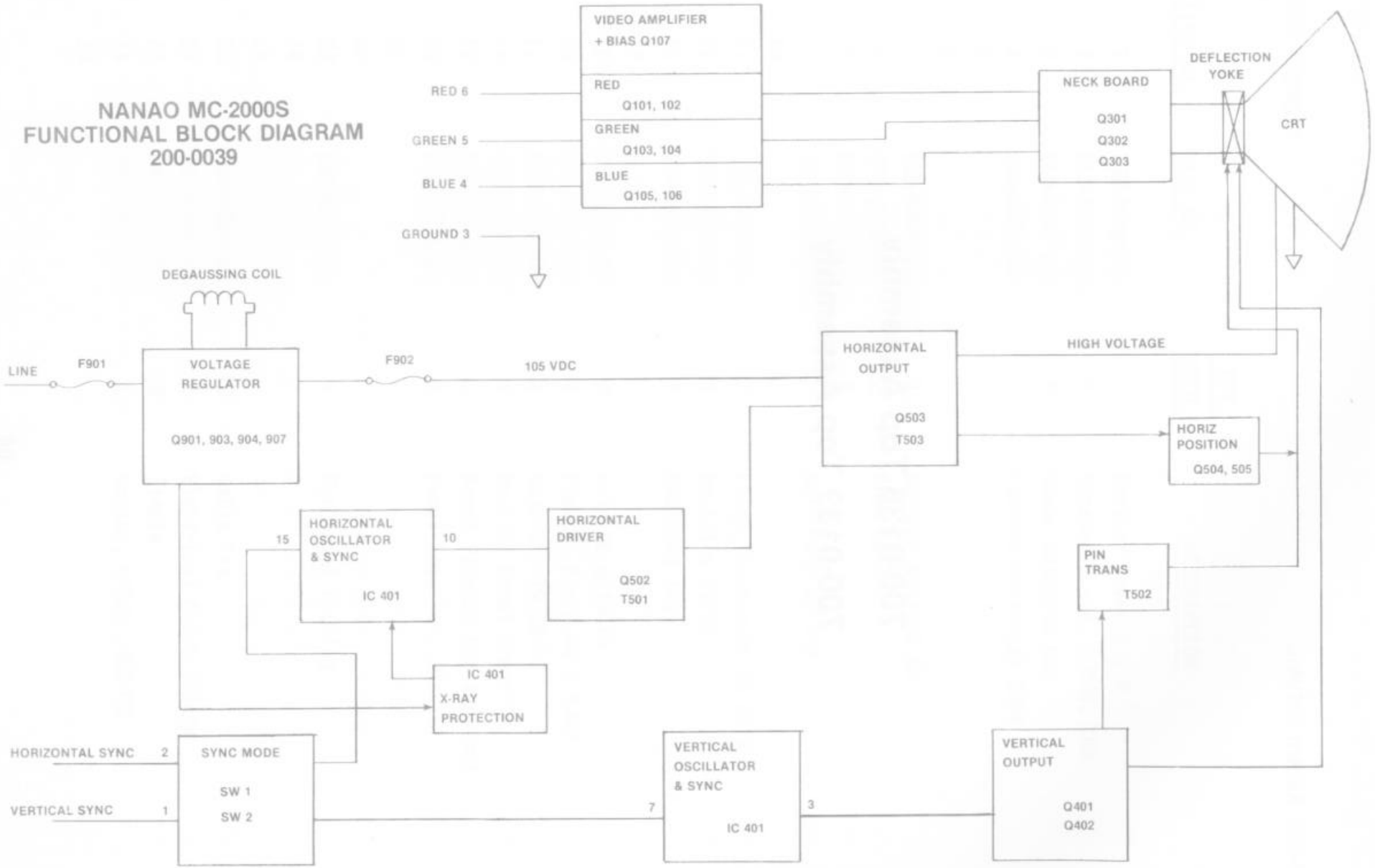

700-0138 Top Assembly

700-0139 Top Assembly

TOP ASSEMBLY DRAWING NUMBER 700-0138

ITEM NO.	PART NO.	QTY. REQD.	DESCRIPTION
1	130-0002-00	1	Speaker Cover 6 x 9
2	130-0020-00	1	Speaker 6 x 9, 8 OHM, 10W
3	140-0021 00	1	Cover Junction Box
4	140-0071-00	1	Cabinet Universal Game
5			
6			
7	220-0008-00	1	Counter Digital 6V
8	220-0178-00	2	Draw Catch
9	220-0194-00	2	
	or 220-0195-00		Coin Mech W/Lamp
10			
11	250-0497-00	2	Clamp, Component BD UNIV
12	250-0038-00	1	Moulding Strip
13	250-0492-00	1	Moulding logo
14			
15	253-0222-00	2	Coin Receptacle
16	253-0238-00	1	Plastic Bag 3.00 x 4.00
17	253-0254-00	1	Mask CRT 19 IN
18	253-0228-00	1	Monitor Panel Clear
19	253-0284-00	1	Bezel Plastic CRT Vertical
20	253-0328-00	1	Panel logo
21			
22			
23	260-0001-00	1	Fan Axial Cooling
24			
25			
26	280-0005-00	40	Cable Tie
27	280-0362-00	2	Electrical Crimp Sleeve
28	280-0475-00	30	Staple
29	280-0495-00	1	Spring, CPRSN .360 OD
30			

TOP ASSEMBLY DRAWING NUMBER 700-0138

ITEM NO.	PART NO.	QTY. REQD.	DESCRIPTION
31	281-0004-12	1	SCR, 8-32 x .750 PN HD PHIL
32	281-0006-08	1	SCR 10-32 x .500 PN HD PHIL
33	281-0014-28	4	SCR 8-32 x 1.75 OVH PHIL
34	281-0042-12	2	SCR 6-20 x .750 PN HD PHIL
35	281-0042-32	4	SCR 6-20 x 2.00 PN HD PHIL
36	281-0045-12	6	SCR 10-16 x .750 PN HD PHIL
37	281-0134-12	4	SCR 8-18 x .750 PN HD PHIL, Black
38			
39	282-0005-20	14	Bolt, 10-24 x 1.25 CRG HD, Black
40	282-0017-16	4	Bolt, 1/4-20 x 1.00 HEX HD
41	282-0017-24	4	Bolt,1/4-20 x 1.50 HEX HD
42			
43	283-0060-18	6	Washer #6 Flat, STL
44	283-0060-22	6	Washer #8 Flat, STL
45	283-0060-24	14	Washer #10 Flat, STL
46	283-0060-34	6	Washer #1/4 Flat, STL
47	282-0061-05	5	Washer #8 Lock, Split, STL
48	283-0061-06	21	Washer #10 Lock, Split, STL
49	283-0061-08	6	Washer #1/4 Lock, Split, STL
50			
51	283-0071-14	1	Nut 10-24 Wing, STL
52	283-0072-13	5	Nut 8-32 HEX
53	283-0072-15	14	Nut 10-24 HEX
54			
55	320-0020-00	2'	Sealant Foam
56	320-0051-00	1'	Tie Ribbon Wire Plastic Coated
57			
58	390-0019-00	1	Lamp Fluorescent
59			
60	420-0030-00	1	Decal Caution 115V
61	420-0624-00	1	Light Baffle

TOP ASSEMBLY DRAWING NUMBER 700-0138

ITEM NO.	PART NO.	QTY. REQD.	DESCRIPTION
62	420-0793-00	1	Decal Toll Free No.
63	420-0912-00	1	Decal FCC Rules Compliance
64	420-0914-07	1	Decal Original Game Seal
65	420-0917-00	1	Decal FCC Warning
66	420-0977-00	1	Graphic Interior
67	420-0978-00	1	Decal, Box
68	420-0979-00	1	Manual
69	420-0982-00	1	Decal Dip SW Settings
70	420-0994-00	1	Graphic Side Left
71	420-0993-00	1	Graphic Side Right
72	420-1006-00	1	New Game Card
73	420-1007-00	1	Decal, Game Instructions
74			
75			
76			
77			
78	800-0145-00	1	Assy AC Junction Box
79	800-0147-01	1	Fluorescent Lamp Assy 2
80	800-0232-00	1	Assy Harn. GND
81	800-0322-00	1	Assy Cord Fan
82	800-0329-00	1	Assy Harn. Monitor AC
83	800-0330-00	1	Assy Harn. GND Monitor
84	800-0362-00	1	Assy Monitor CLR Vertical
85	800-0370-00	1	GND Strap
86	800-0371-00	1	Assy Speaker Harn.
87	800-0372-00	1	Harn. Coin Mech
88			
89			
90			
91	800-3396-00	1	Control Panel Assy
92			

ITEM NO.	PART NO.	QTY. REQD. -00	-01	-02	DESCRIPTION
93					
94	800-3401-00	1	-	-	Assy, Component Shelf
95	800-3401-01	-	1	-	Assy, Component Shelf
96	800-3401-02	-	-	1	Assy, Component Shelf
	420-0780-00	REF			Game Shipping Kit

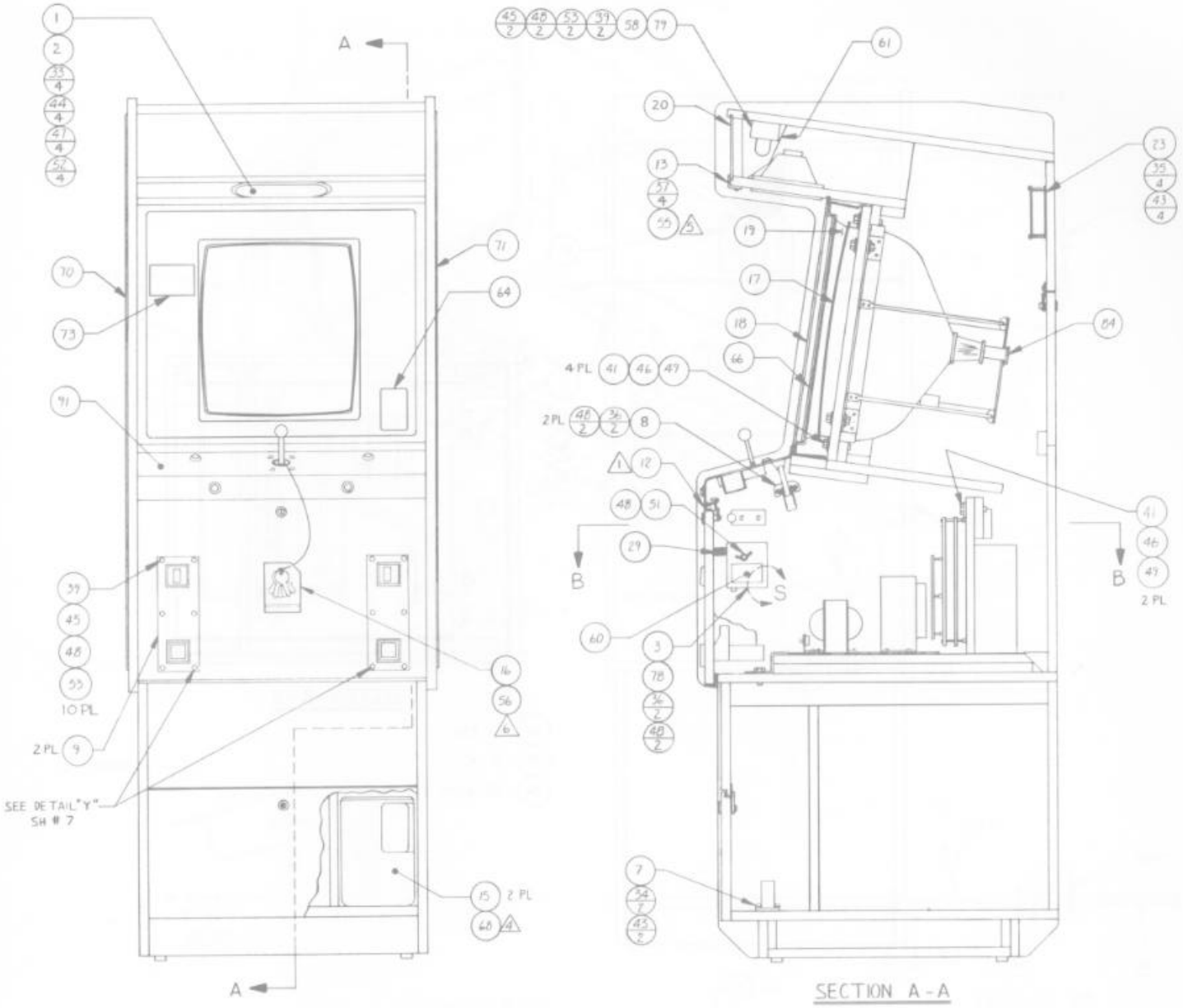
A
A
B
B
S
SEE DETAIL "Y" SH # 7
10 PL
2 PL
4 PL
2 PL
2 PL
SECTION A-A

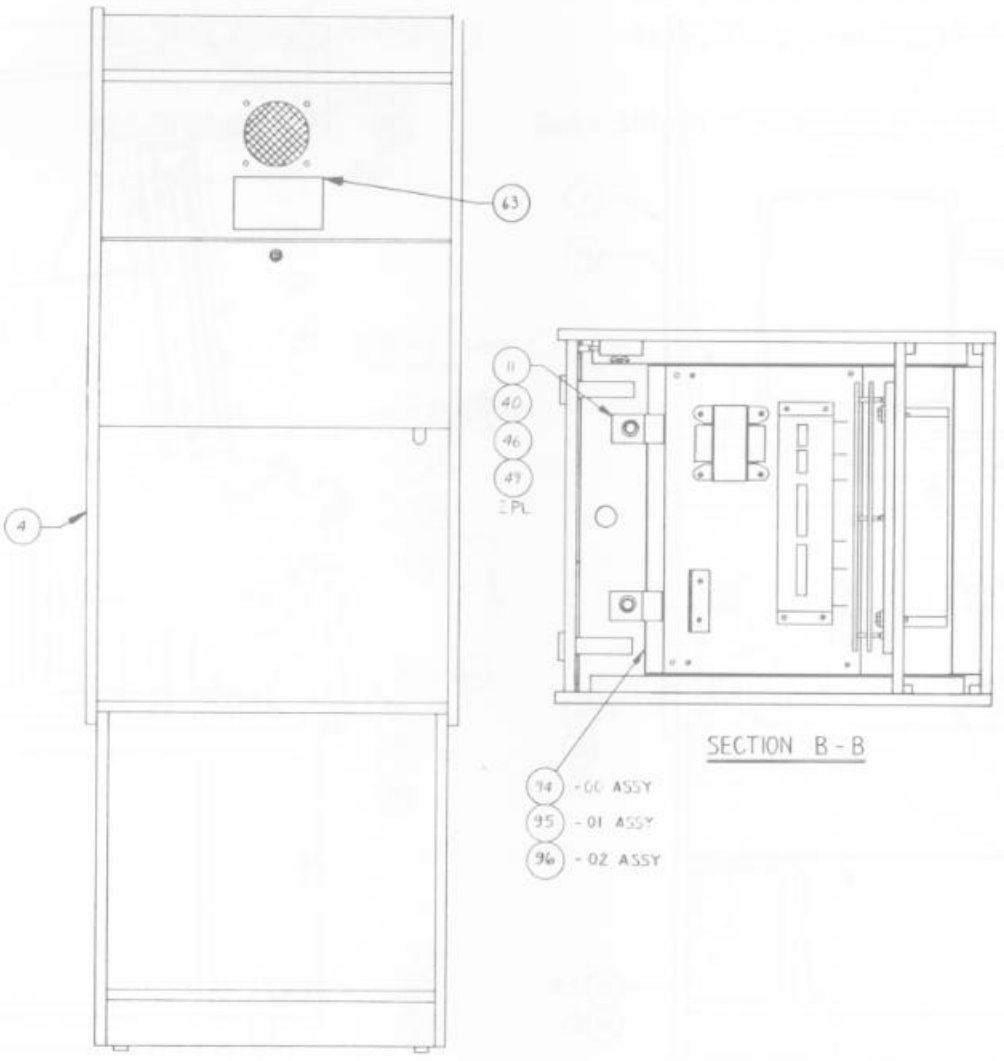
63
4
11
40
46
47
EPL
SECTION B - B
94 - 00 ASSY
95 - 01 ASSY
96 - 02 ASSY

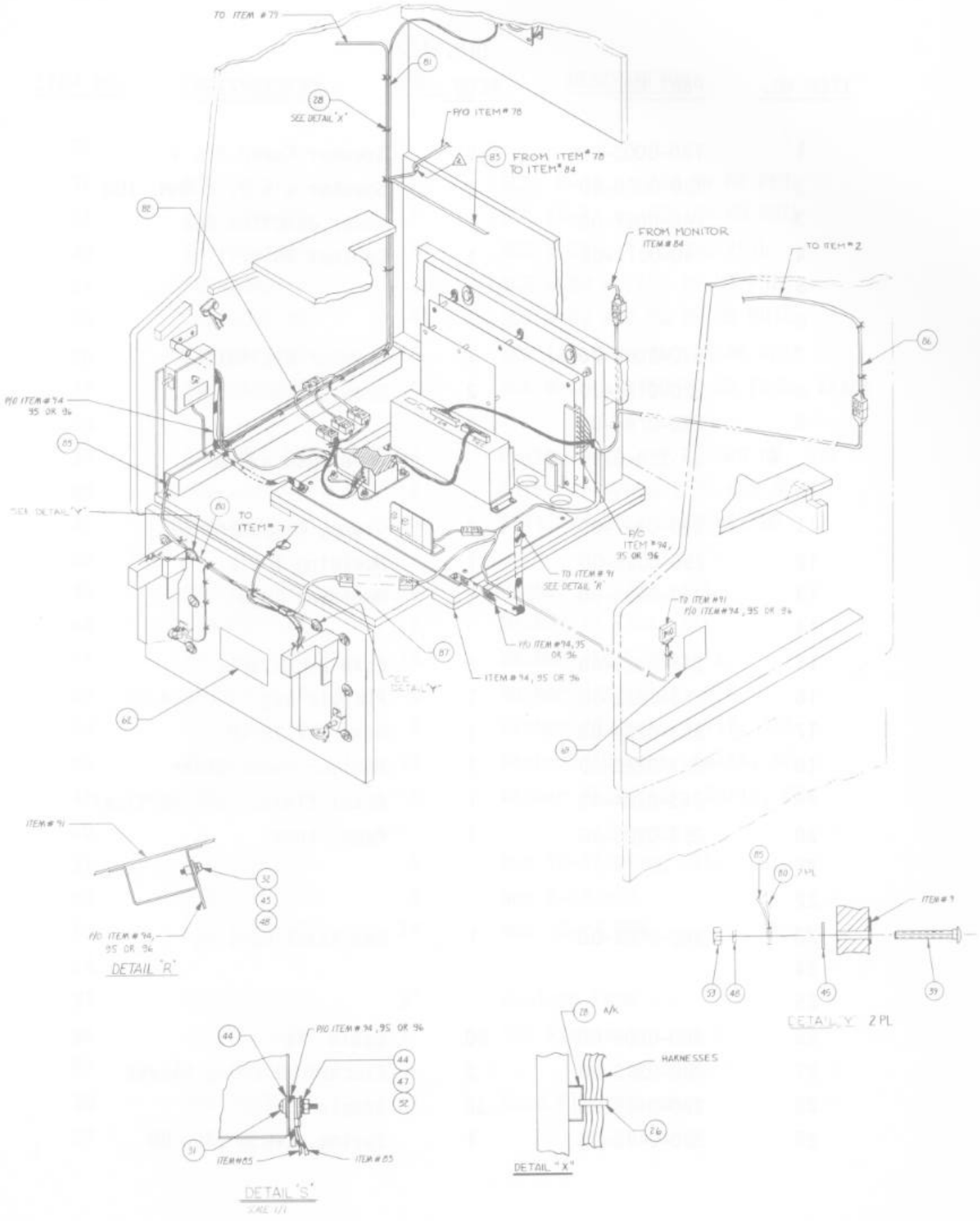
TO ITEM # 79
81
28
SEE DETAIL "X"
P/O ITEM # 78
83
FROM ITEM # 78
TO ITEM # 84
82
FROM MONITOR
ITEM # 84
TO ITEM # 2
86
P/O ITEM # 94
95 OR 96
85
SEE DETAIL "Y"
80
TO
ITEM # 77
P/O
ITEM # 94,
95 OR 96
TO ITEM # 91
SEE DETAIL "R"
TO ITEM # 91
P/O ITEM # 94, 95 OR 96
87
P/O ITEM # 94, 95 OR 96
SEE
DETAIL "Y"
ITEM # 94, 95 OR 96
62
69
ITEM # 91
32
45
48
P/O ITEM # 94,
95 OR 96
DETAIL "R"
85
80 2 PL
ITEM # 9
53
48
45
39
DETAIL "Y" 2 PL
44
P/O ITEM # 94, 95 OR 96
44
47
52
31
ITEM # 85
ITEM # 85
DETAIL "S"
SCALE 1/1
28 A/R
HARNESSES
26
DETAIL "X"

TOP ASSEMBLY

DRAWING NUMBER 700-0139

ITEM NO.	PART NO.	QTY. REQD.	DESCRIPTION
1	130-0002-00	1	Speaker Cover 6 x 9
2	130-0020-00	1	Speaker 6 x 9, 8 OHM, 10W
3	140-0021 00	1	Cover Junction Box
4	140-0071-00	1	Cabinet Univ. I
5			
6			
7	220-0008-00	1	Counter Digital 6V
8	220-0178-00	2	Draw Catch
9	220-0194-00	2	
	or 220-0195-00		Coin Mech W/Lamp
10			
11	250-0497-00	2	Clamp, Component BD
12	250-0038-00	1	Moulding Strip
13	250-0492-00	1	Moulding logo
14			
15	253-0222-00	2	Coin Receptacle
16	253-0238-00	1	Plastic Bag 3.00 x 4.00
17	253-0254-00	1	Mask CRT 19 IN
18	253-0228-00	1	Monitor Panel Clear
19	253-0284-00	1	Bezel Plastic CRT Vertical
20	253-0328-00	1	Panel logo
21			
22			
23	260-0001-00	1	Fan Axial Cooling
24			
25			
26	280-0005-00	40	Cable Tie
27	280-0362-00	2	Electrical Crimp Sleeve
28	280-0475-00	30	Staple
29	280-0495-00	1	Spring, CPRSN .360 OD

TOP ASSEMBLY DRAWING NUMBER 700-0139

ITEM NO.	PART NO.	QTY. REQD.	DESCRIPTION
30			
31	281-0004-12	1	SCR, 8-32 x .750 PN HD PHIL
32	281-0006-08	1	SCR 10-32 x .500 PN HD PHIL
33	281-0014-28	4	SCR 8-32 x 1.75 OVH PHIL
34	281-0042-12	2	SCR 6-20 x .750 PN HD PHIL
35	281-0042-32	4	SCR 6-20 x 2.00 PN HD PHIL
36	281-0045-12	6	SCR 10-16 x .750 PN HD PHIL
37	281-0134-12	4	SCR 8-18 x .750 PN HD PHIL, Black
38			
39	282-0005-20	14	Bolt, 10-24 x 1.25 CRG HD, Blk
40	282-0017-16	2	Bolt, 1/4-20 x 1.00 HEX HD
41	282-0017-24	6	Bolt,1/4-20 x 1.50 HEX HD
42			
43	283-0060-18	6	Washer #6 Flat, STL
44	283-0060-22	6	Washer #8 Flat, STL
45	283-0060-24	14	Washer #10 Flat, STL
46	283-0060-34	6	Washer #1/4 Flat, STL
47	282-0061-05	5	Washer #8 Lock, Split, STL
48	283-0061-06	21	Washer #10 Lock, Split, STL
49	283-0061-08	6	Washer #1/4 Lock, Split, STL
50			
51	283-0071-14	1	Nut 10-24 Wing, STL
52	283-0072-13	5	Nut 8-32 HEX
53	283-0072-15	14	Nut 10-24 HEX
54			
55	320-0020-00	2'	Sealant Foam
56	320-0051-00	1'	Tie Ribbon
57			
58	390-0019-00	1	Lamp Fluorescent
59			

TOP ASSEMBLY DRAWING NUMBER 700-0139

ITEM NO.	PART NO.	QTY. REQD.	DESCRIPTION
60	420-0030-00	1	Decal Caution 115V
61	420-0624-00	1	Light Baffle
62	420-0793-00	1	Decal Toll Free No.
63	420-0912-00	1	Decal FCC
64	420-0914-07	1	Decal Original Game Seal
65			
66	420-0977-00	1	Graphic Interior
67	420-0978-00	1	Decal, Box
68	420-0979-00	1	Manual
69	420-0982-00	1	Decal Dip SW Settings
70	420-1016-00	1	Graphic Side Left
71	420-1017-00	1	Graphic Side Right
72	420-1006-00	1	New Game Card
73	420-1007-00	1	Decal, Game Instructions
74			
75			
76			
77			
78	800-0145-00	1	Assy AC Junction Box
79	800-0147-01	1	Fluorescent Lamp Assy 2 UL
80	800-0232-00	1	Assy Harn. GND
81	800-0322-00	1	Assy Cord Fan
82	800-0329-00	1	Assy Harn. Monitor AC
83	800-0330-00	1	Assy Harn. GND Monitor
84	800-0362-00	1	Assy Monitor CLR Vertical
85	800-0370-00	1	GND Strap
86	800-0371-00	1	Assy Speaker Harn.
87	800-0372-00	1	Harn. Coin Mech
88			
89			

TOP ASSEMBLY

DRAWING NUMBER 700-0139

ITEM NO.	PART NO.	QTY. REQD.	DESCRIPTION
90			
91	800-3396-00	1	Control Panel Assy
92			
93			
94	800-3401-02	1	Assy, Component Shelf
95			
96			
	420-0780-00	REF	Game Shipping Kit

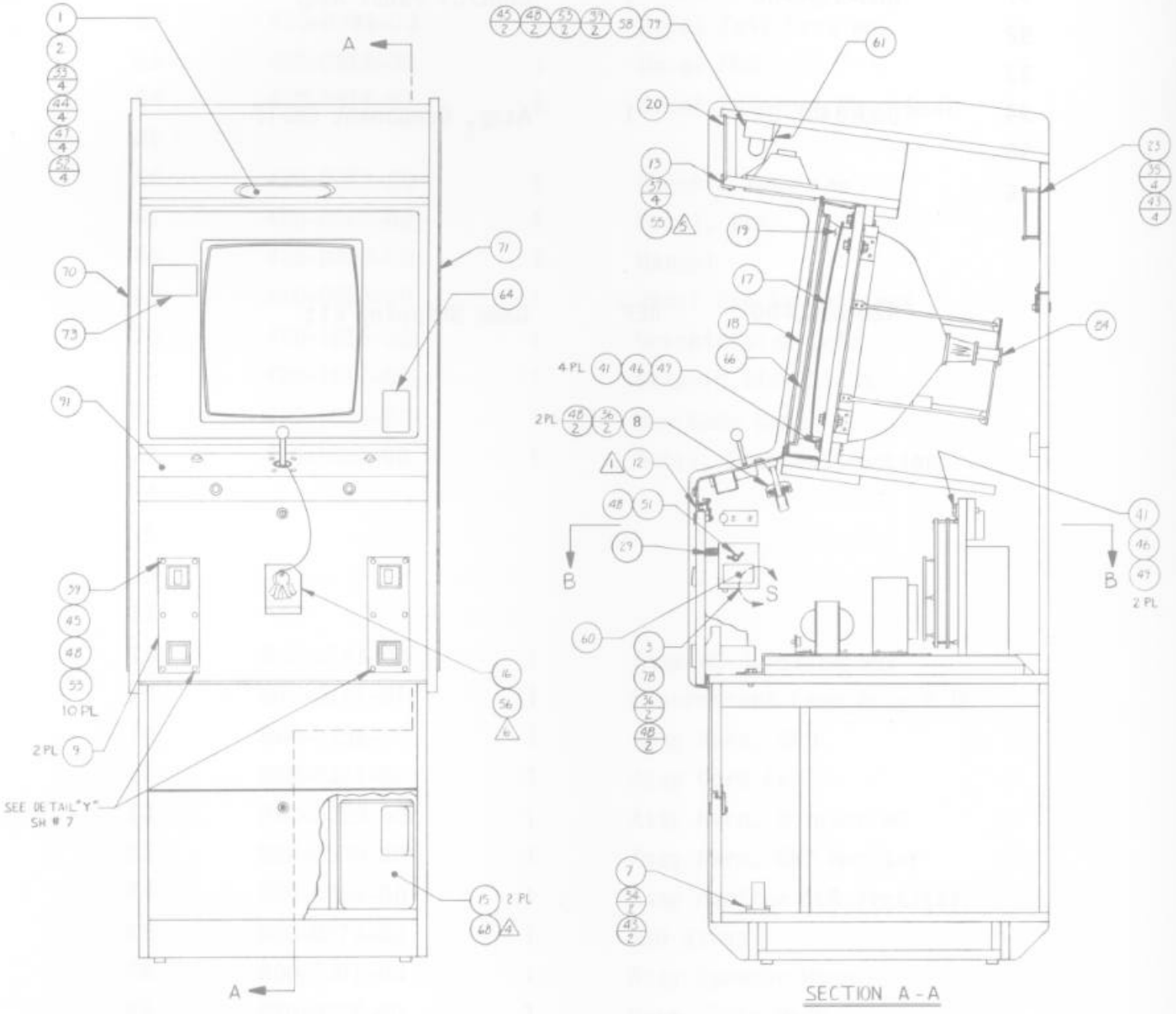
A
A
B
B
S
10 PL
2 PL
SEE DETAIL "Y" SH # 7
4 PL
2 PL
2 PL
SECTION A-A

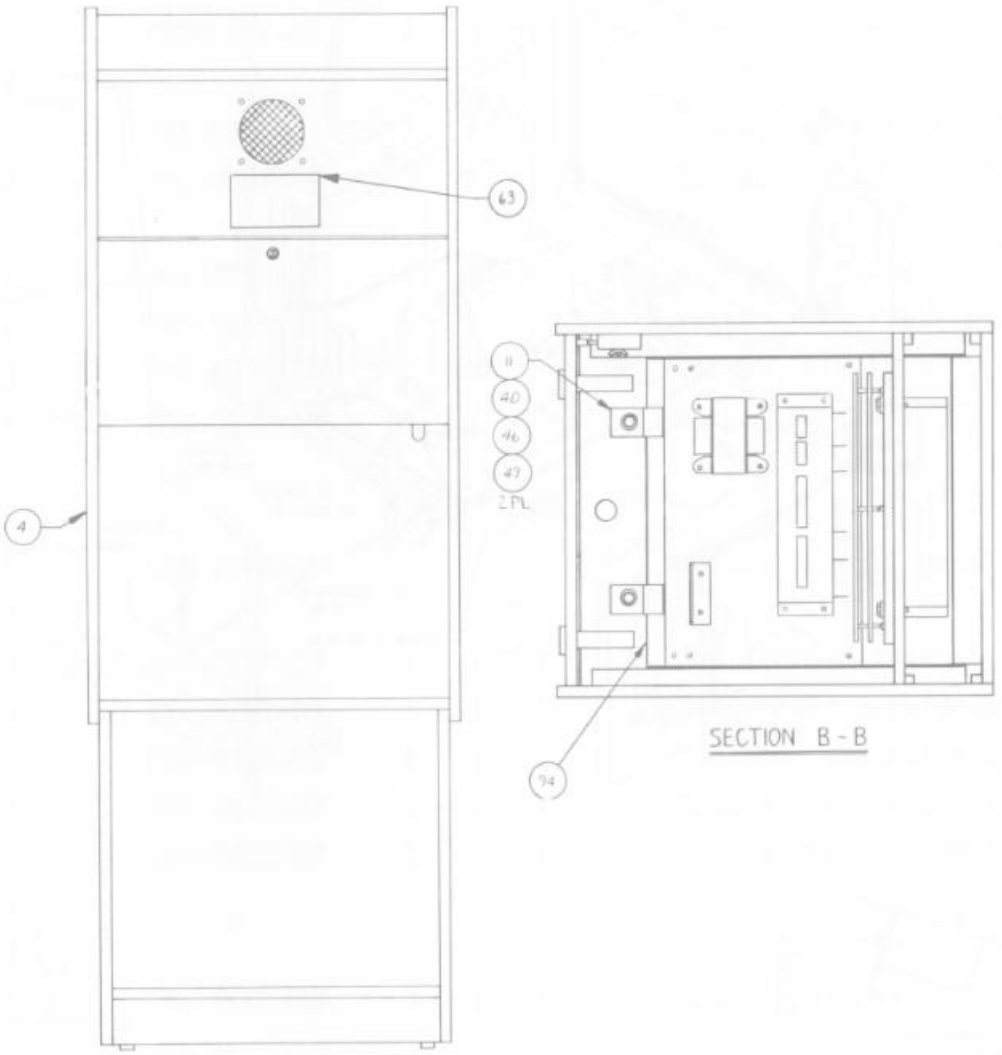
63
4
11
40
46
47
2 PL
94
SECTION B - B

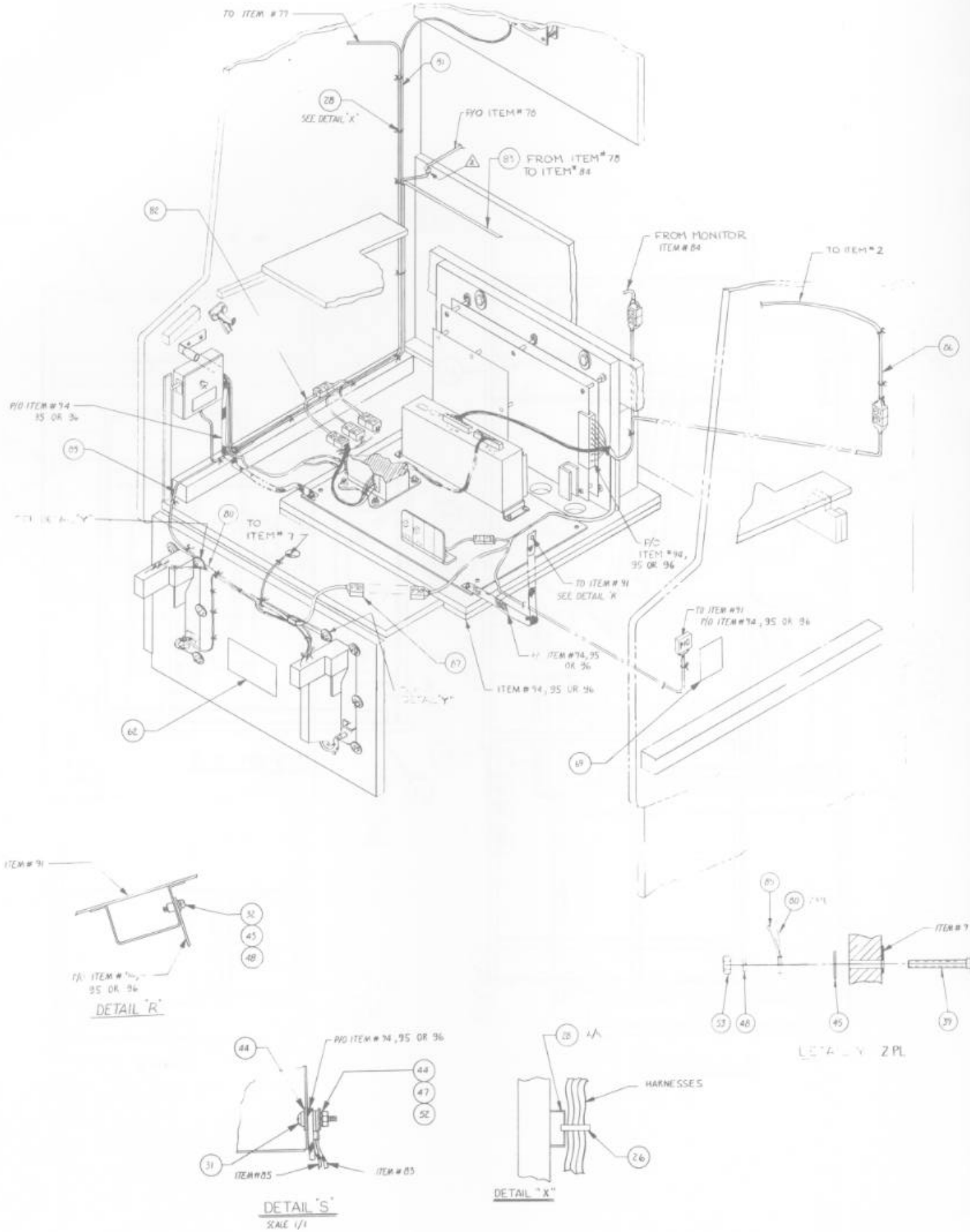
TO ITEM # 77
SEE DETAIL 'X'
P/O ITEM # 78
FROM ITEM # 78 TO ITEM # 84
FROM MONITOR ITEM # 84
TO ITEM # 2
P/O ITEM # 94, 95 OR 96
TO ITEM # 7
TO ITEM # 91 SEE DETAIL 'R'
ITEM # 94, 95 OR 96
DETAIL 'R'
DETAIL 'S'
SCALE 1/1
DETAIL 'X'
HARNESSES
2 PL

COMPONENT SHELF ASSEMBLY DRAWING NUMBER 800-3401

ITEM NO.	PART NO.	QTY REQD. -00	-01	-02	DESCRIPTION
1	250-0654-00	1	1	1	Ground Plane
2					
3	252-0274-00	1	1	1	Component Shelf
4					
5	280-0005-00	3	3	3	Cable Tie
6	280-0327-00	3	3	3	Base Tie Wrap
7					
8	281-0045-12	6	6	6	Screw, 10-16 X .750 PN HD PHIL
9	281-0052-12	5	5	5	Screw, 6-20 X .750 FL HD PHIL
10					
11	283-0060-24	4	4	4	Washer, #10 Flat
12	283-0060-27	2	2	2	Washer, #10 Flat, Large O.D.
13	283-0061-06	18	18	18	Washer, #10 Lock
14	283-0072-16	12	12	12	Nut, #10-32 Hex
15					
16					
17	420-1008-00	1	1	1	Volume Control Decal
18					
19	800-0190-00	1	1	1	EMI Xformer Assembly
20	800-0191-04	1	1	1	G-80 Power Supply Assembly
21	800-0364-01	1	1	1	Operator Control Block Assembly
22	800-0423-07	1	1	1	Ground Strap Assembly
23	800-0423-08	1	1	1	Ground Strap Assembly
24					
25					
26	800-3402-00	1	1	1	Master Harness Assembly
27					
28	834-5197-00	1	-	-	IC Board Assembly
29	834-5165-00	-	1	-	IC Board Assembly
30	834-5180-00	-	-	1	IC Board Assembly

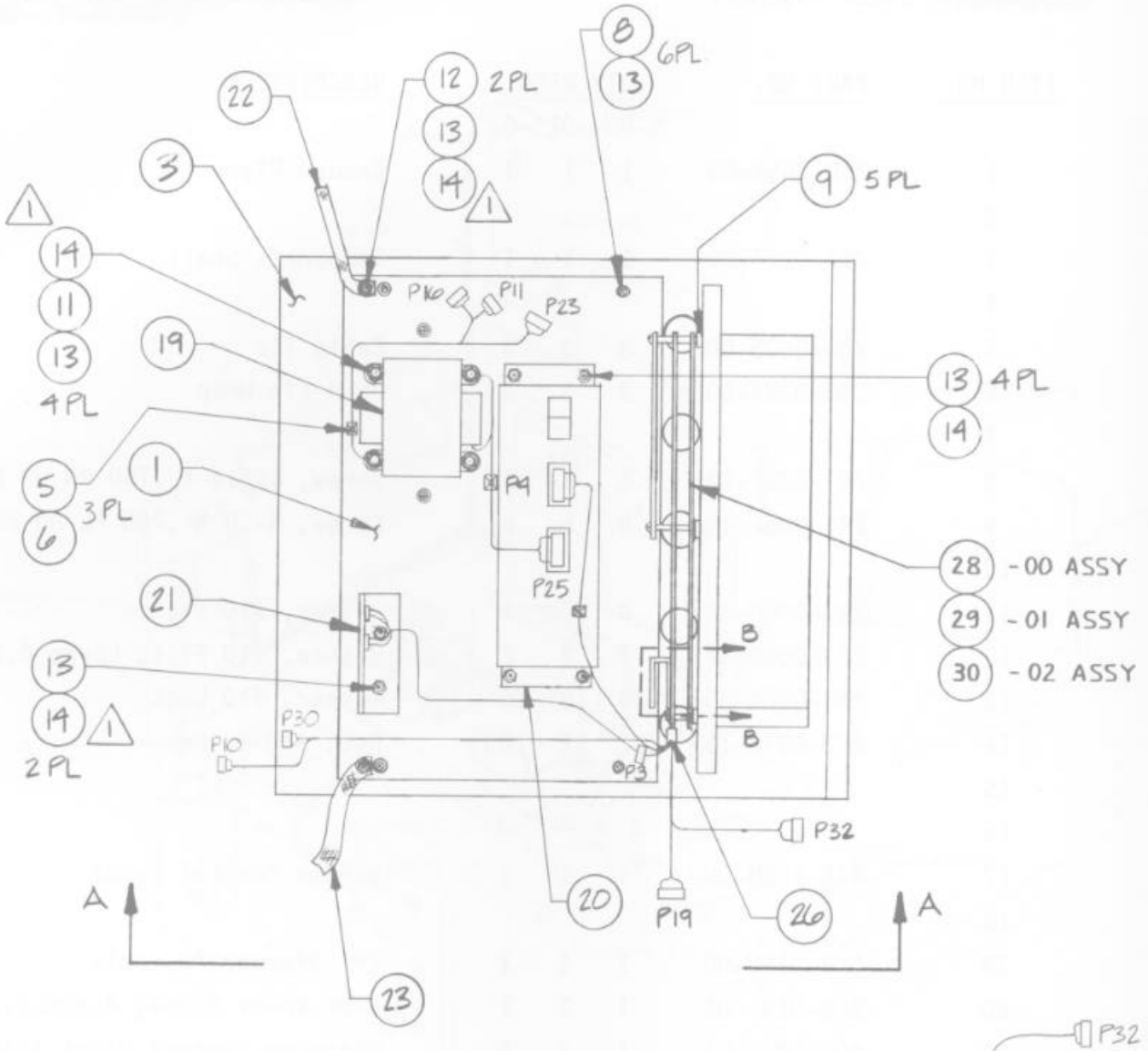

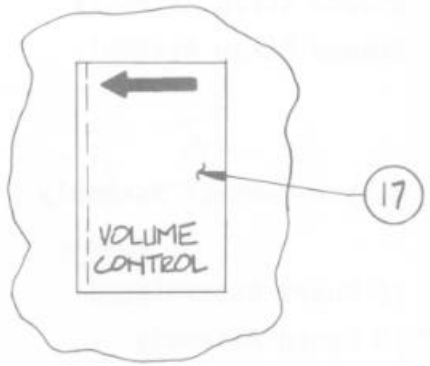

VIEW B-B

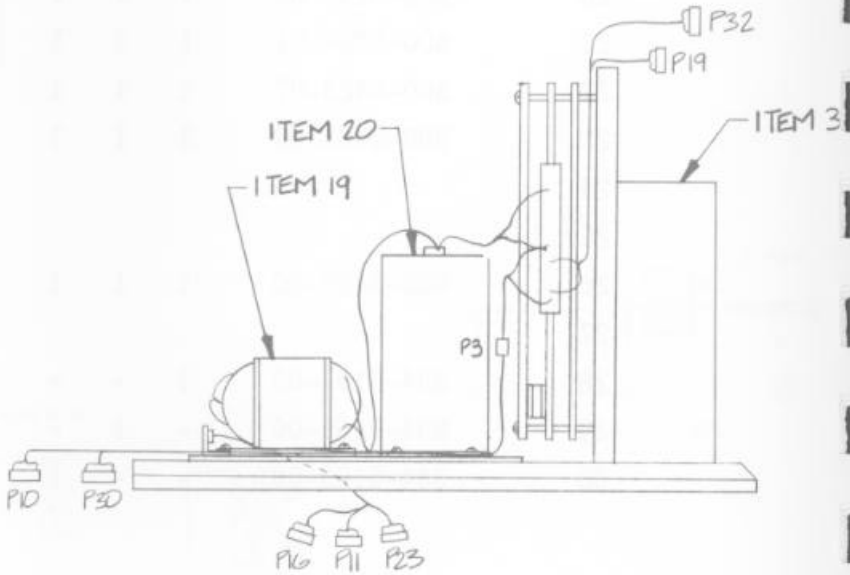

VIEW A-A

OPERATOR CONTROL BLOCK ASSEMBLY "Z" DRAWING NUMBER 800-0364

ITEM NO.	PART NO.	QTY REQD. -00	QTY REQD. -01	DESCRIPTION
1	800-0387-00	1	-	Operator Cont. Blk. Harness Assy
2	800-0388-00	1	1	Operator Control Block
3	800-0484-00	-	1	Operator Cont. Blk. Harness Assy

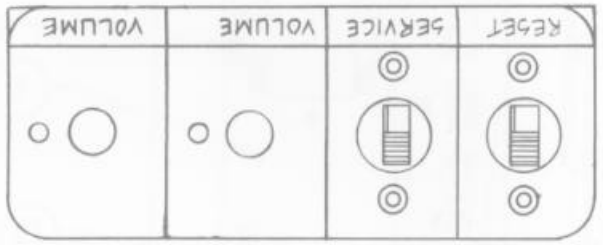
VOLUME
VOLUME
SERVICE
RESET

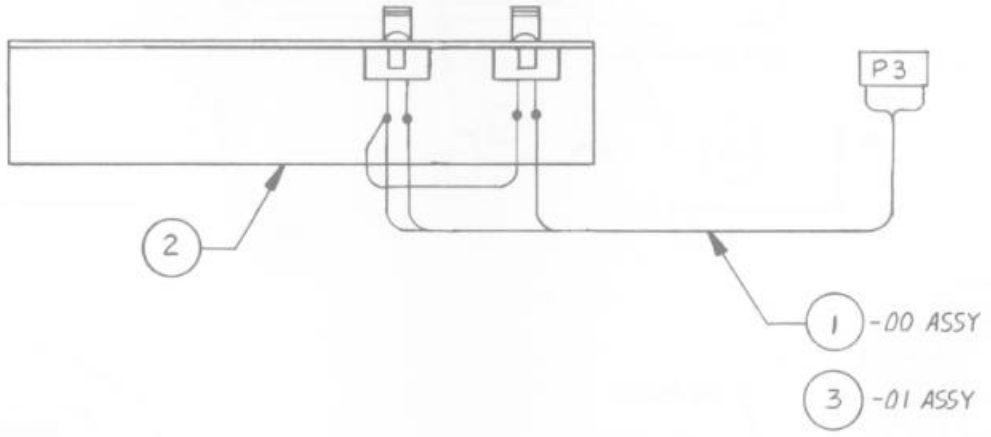
P3
2
1 -00 ASSY
3 -01 ASSY

Common Assemblies

AC JUNCTION BOX ASSEMBLY

DRAWING NUMBER 800-0145

ITEM NO.	PART NO.	QTY REQD.				DESCRIPTION	REF DES.
		-00	-01	-02	-03		
1	140-0020-00	1	1	1	1	Junction Box Metal	
2	211-0165-00	2	2	2	2	Conn Quick Fem Fully INSL.	.250 x .032 (AWG 18-22)
3	211-0164-00	4	4	4	4	Conn Quick Fem Fully INSL.	.187 x .020 (AWG 18-22)
4							
5	280-0361-00	1	1	1	1	Bushing S/REL AC Cord	
6	270-0001-00	1	1	1	1	Filter EMI	
7	280-0007-00	1	1	1	1	Bushing S/REL 1/2	
8	280-0362-00	4	4	4	4	Electric Crimp Sleeve AWG 24-18	
9	420-0598-00	1	-	-	-	Decal 2 AMP Fuse	
10	510-0013-00	1	1	1	1	Switch Spot Cherry	
11	514-0001-00	1	-	-	-	Fuse 2 AMP 250V S.B.	
12	514-0005-00	1	1	1	1	Holder Fuse	
13	600-0001-00	1	1	1	1	Cord Line 3 Cond.	
14							
15	600-0079-00	2FT	2FT	2FT	3.25	Cord Line Zip	
16	280-0005-00	2	2	2	2	Cable Tie	
17	281-0002-10	2	2	2	2	SCK PN HD PHIL #6-32 x .625 Mach	
18	283-0072-11	2	2	2	2	Nut HEX HD #6-32 Mach	
19	283-0062-04	2	2	2	2	Washer Lock INT. Tooth #6	
20							
21							
22							
23							

AC JUNCTION BOX ASSEMBLY DRAWING NUMBER 800-0145

ITEM NO.	PART NO.	QTY. REQD. -00	-01	-02	-03	DESCRIPTION	REF DES.
24	283-0060-32	1	1	1	1	Washer Flat Reg. O.D. #1/4	
25	283-0072-15	1	1	1	1	Nut HEX HD #10-24 Mach	
26	282-0005-28	1	1	1	1	Bolt Carriage #10-24 x 1.750 Mach	
27	310-0016-16	1	1	1	1	Insul. TBG .187 ID	
28							
29	420-0597-00	-	-	1	-	Decal 1 AMP Fuse	
30	420-0634-00	-	1	-	1	Decal 5 AMP Fuse	
31	514-0051-00	-	-	1	-	Fuse 1 AMP 250V	
32	514-0053-00	-	1	-	1	Fuse 5 AMP S.B.	
33	211-0044-00	-	-	-	1	Conn Cap AMP 2 Pin	
34	211-0041-00	-	-	-	2	Conn Pin AMP	
35	211-0027-01	-	-	-	2	Conn Ring Lug #6 Insulated	

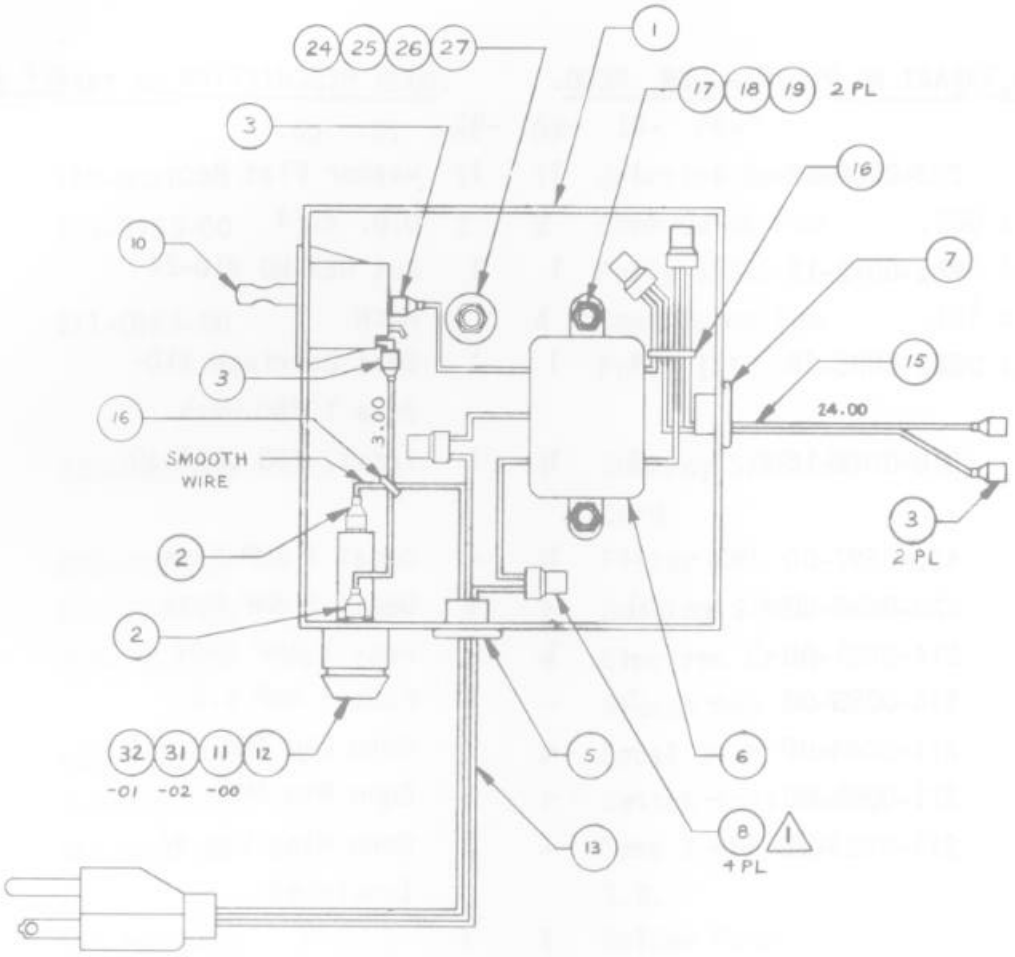
24 25 26 27
1
17 18 19 2 PL
3
16
10
7
3
15
16
3.00
24.00
SMOOTH WIRE
3
2 PL
2
2
32 31 11 12
-01 -02 -00
5
6
8 1
4 PL
13

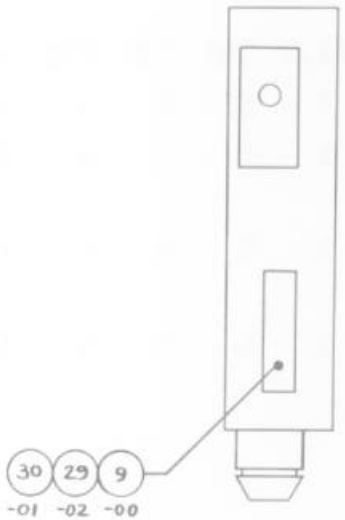
30 29 9
-01 -02 -00

XFMR EMI ASSEMBLY DRAWING NUMBER 800-0190

ITEM NO.	PART NO.	QTY. REQD.		DESCRIPTION
1	560-0055-00	1	1	Transformer G-80 PWR Supply
2	212-0016-00	1	1	Conn. FEM 10 Pin
3	211-0005-00	10	10	Conn. Crimp
4	211-0045-00	1	1	Conn. Plug AMP 6 Pin
5	211-0042-00	6	6	Conn. Socket
6	211-0043-00	2	2	Conn. Plug AMP 2 Pin
7	600-0079-00	1.00'	1.25'	Zip Cord
8	280-0005-00	4	4	Cable Tie
9	600-0092-70	.5'	.5'	Wire 18 AWG BLK
10	280-0359-00	3	3	Electric Crimp Sleeve
11	211-0077-00	4	4	Conn. Term Socket 20-14 AWG

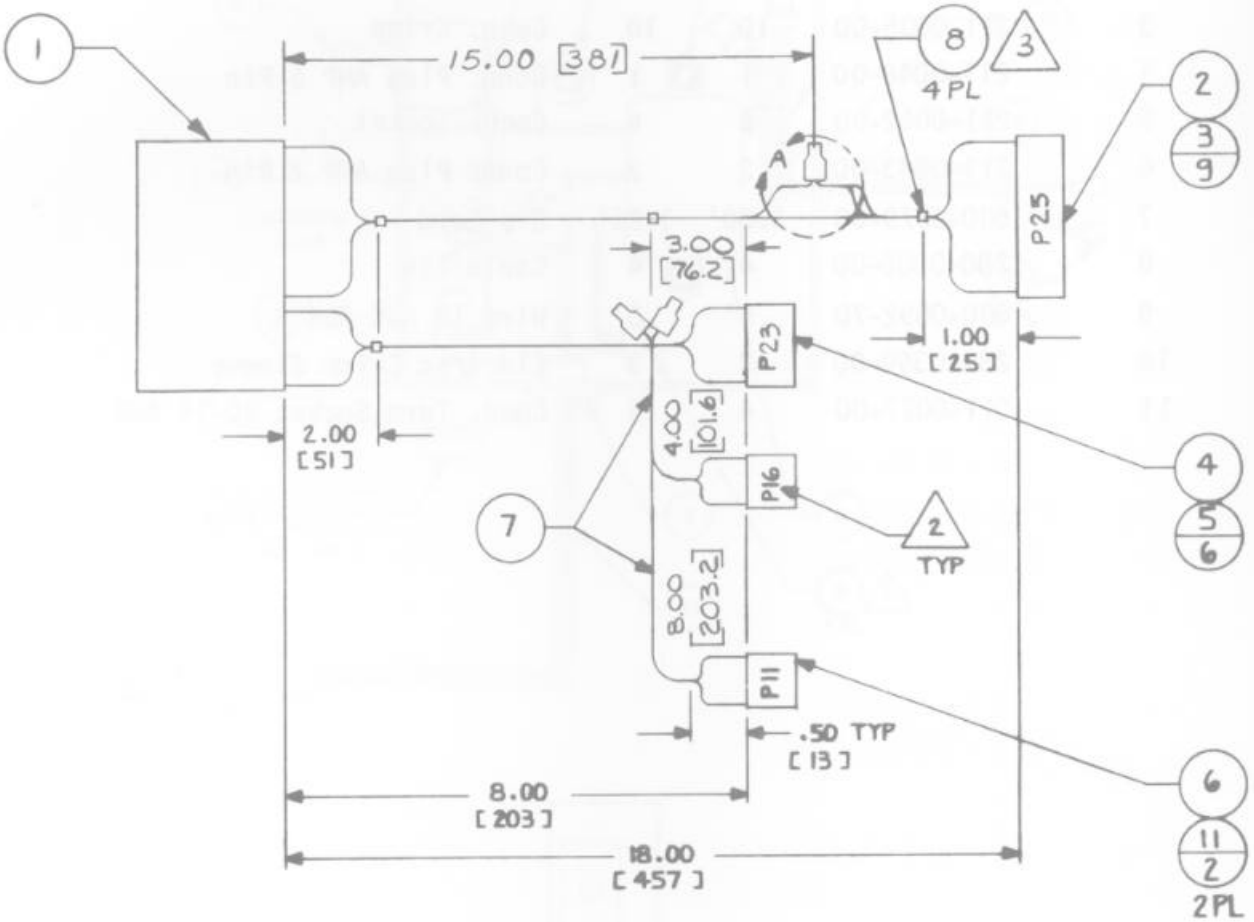
1
15.00 [381]
8
3
4PL
2
3
9
A
3.0
[76.2]
P25
P23
1.00
[25]
2.00
[51]
4.00
[101.6]
P16
7
2
TYP
4
5
6
8.00
[203.2]
P11
.50 TYP
[13]
8.00
[203]
18.00
[457]
6
11
2
2PL

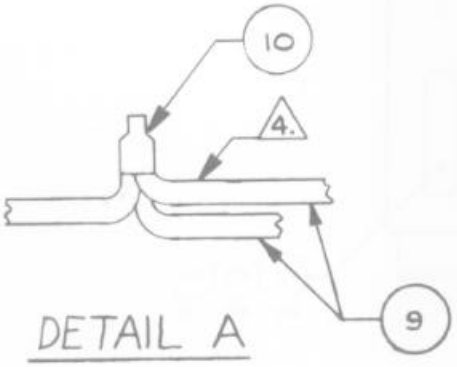
10
4.
9
DETAIL A

FLUORESCENT LAMP ASSEMBLY

DRAWING NUMBER 800-0147

ITEM NO.	PART NO.	QTY. REQD.					DESCRIPTION
1	211-0041-00	2	2	2	2	2	Conn Pin AMP
2	211-0044-00	1	1	1	1	1	Conn Cap AMP 2 Pin
3							
4	211-0166-00	1	-	-	-	-	Conn Crimp Ring #10
5							
6	280-0361-00	-	1	1	1	1	BSHG STR RLF AC Cord
7	280-0362-00	-	2	2	2	2	Elec. CRP SL 24-18 AWG
8							
9	281-0002-06	1	1	1	1	1	SCR #6-32 x .375 Pan HD PHIL
10							
11							
12							
13							
14	283-0060-19	-	1	1	1	1	Washer #6 Flat, Steel
15							
16							
17	390-0083-00	1	-	-	-	-	Fluor. Lamp FXT 18 IN.
18	390-0117-00	-	1	1	1	1	Fluor. Lamp FXT 18 IN. U.L.
19							
20							
21							
22							
23	600-0079-00	-	5.9'	7.6'	4.0'	4.4'	CA 2 Cond. Zip Cord

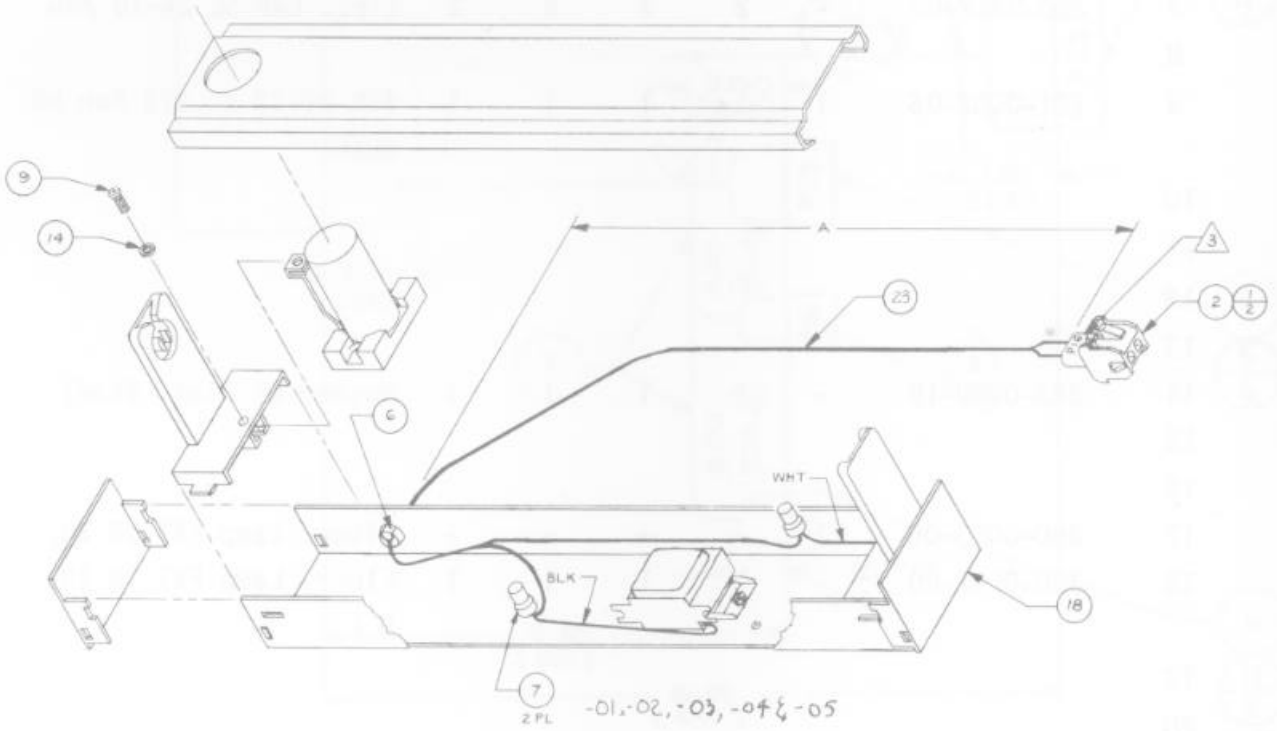
9
14
A
3
23
2 1/2
6
WHT
BLK
18
7
2 PL
-01,-02,-03,-04 & -05

CONTROL PANEL ASSEMBLY

DRAWING NUMBER 800-3396

ITEM NO.	PART NO.	QTY. REQD.	DESCRIPTION	REF DES.
1	240-0006-00	2	Button Plunger, Red	
2	240-0009-00	2	Button Plunger, Yellow	
3				
4	250-0648-00	1	Control Panel	
5	253-0329-00	1	Graphic Control Panel	
6				
7	280-0005-00	9	Cable Tie	
8	280-0327-00	3	Base Tie Wrap	
9	280-0329-00	4	Nut, 1/2 IN. -13 HEX PAL	
10				
11	282-0005-12	4	Bolt #10-24 x .750 LG CRG HD, Black	
12				
13	283-0060-25	4	Washer #10 Flat Steel	
14	283-0061-06	4	Washer #10 Lock Split, Steel	
15	283-0072-15	4	Nut #10-24 HEX Mach THD	
16				
17				
18	510-0064-00	4	Switch Pushbutton MTL PNL	S1-S4
19	510-0075-00	1	Joystick, 8-Way	S5-S8
20				
21				
22	800-3398-00	1	Control Panel Harn. Assy.	

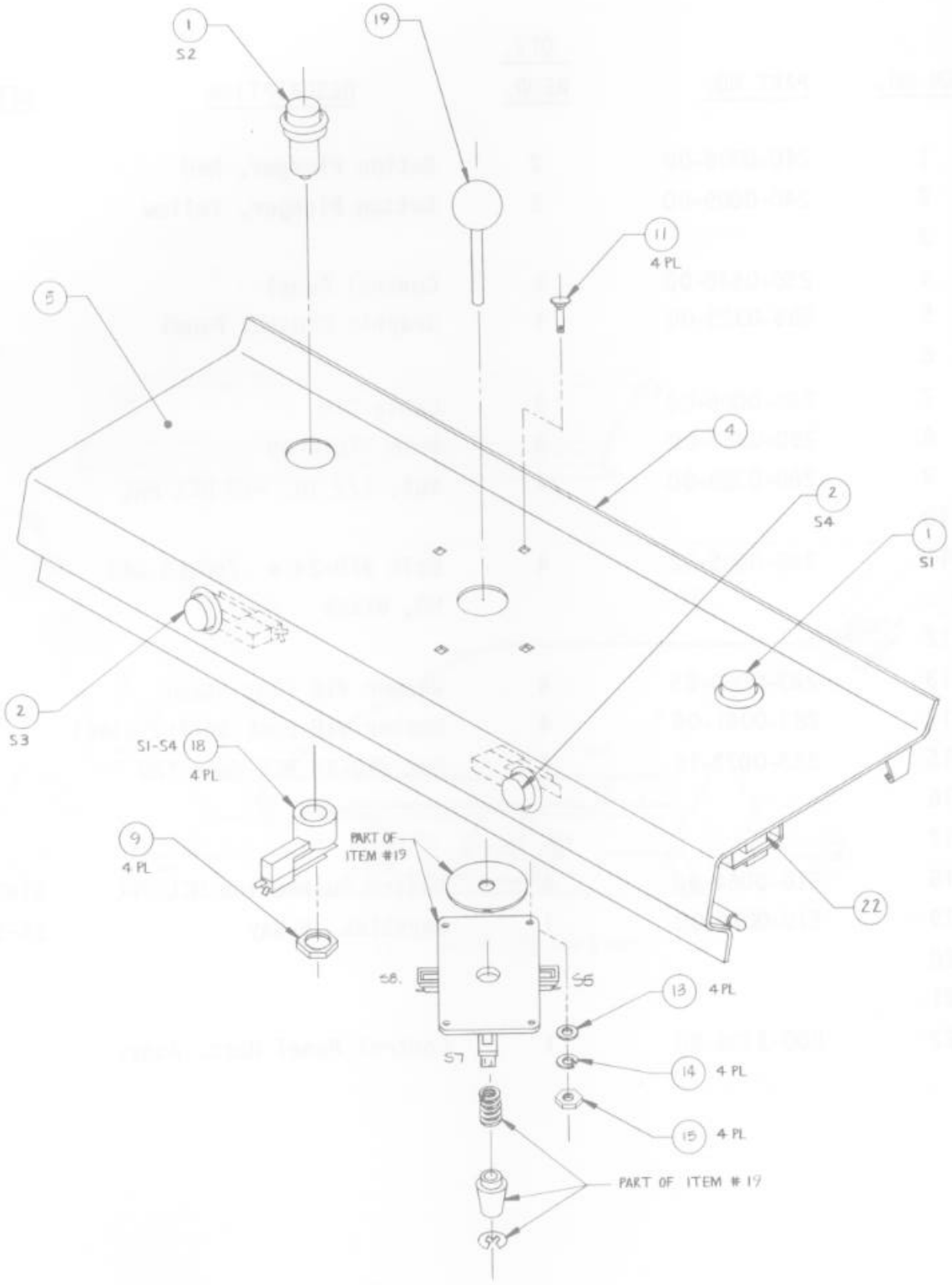
1
S2
19
11
4 PL
5
4
2
S4
1
S1
2
S3
S1-S4 18
4 PL
9
4 PL
PART OF
ITEM #19
22
S8.
S6
13 4 PL
S7
14 4 PL
15 4 PL
PART OF ITEM # 17

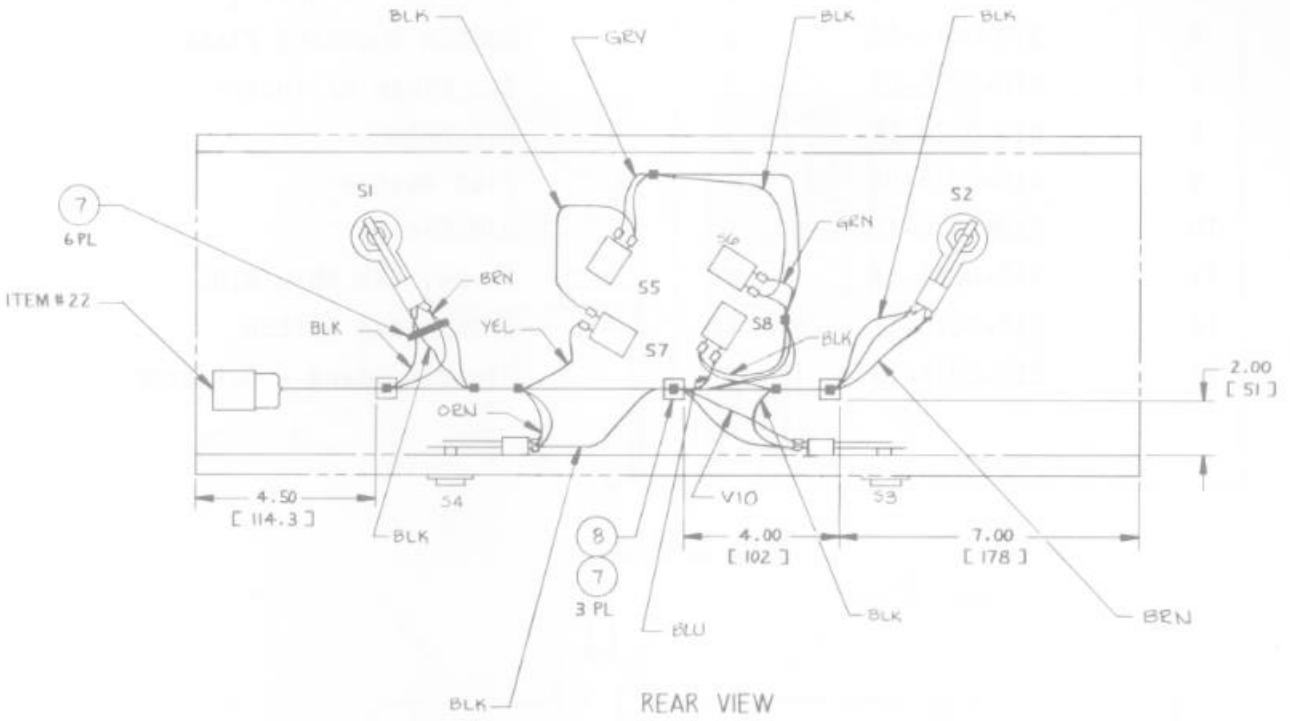
BLK
GRY
BLK
BLK
S1
S2
7
6 PL
GRN
BRN
S5
S6
ITEM # 22
BLK
YEL
S7
S8
BLK
2.00
[51]
ORN
4.50
[114.3]
S4
S3
V10
BLK
8
7
3 PL
4.00
[102]
7.00
[178]
BLU
BLK
BRN
BLK

REAR VIEW

8-WAY JOYSTICK ASSEMBLY DRAWING NUMBER 510-0075

ITEM NO.	PART NO.	QTY REQD.	DESCRIPTION
1	510-0075-01	1	Ball, Handle, Shaft
2	510-0075-02	1	Actuator Switch
3	510-0075-03	1	2" Washer
4	510-0075-04	1	Bottom Washer
5	510-0075-05	1	Compression Spring
6	510-0075-06	1	Switch Mounting Plate
7	510-0075-07	1	Top Plate w/ insert
8	510-0075-08	1	Diaphram
9	510-0075-09	1	Flat Washer
10	510-0075-10	1	3/8 E-ring
11	510-0075-11	4	Screw, 6X1 PHIL R.H.
12	510-0075-12	4	2/2 Molded Switch
13	510-0075-13	4	Plastic Guard - Actuator

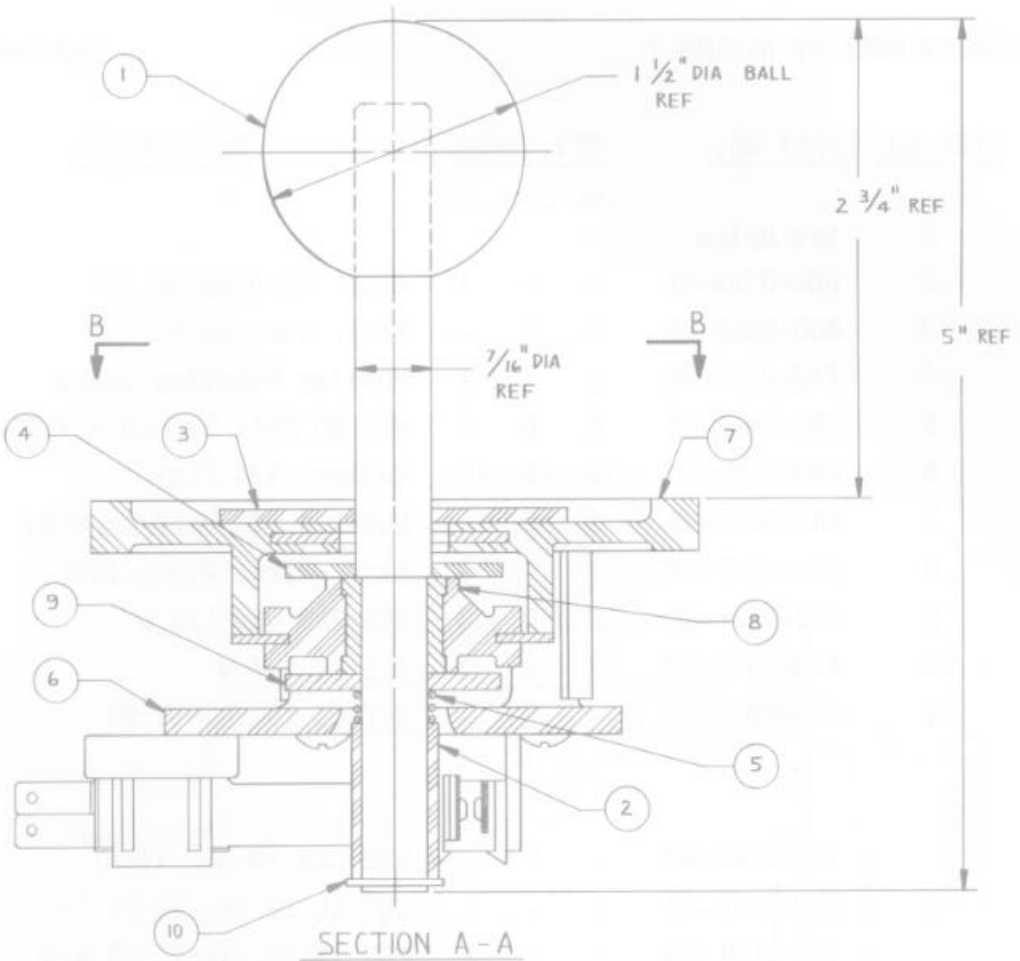
1
1 ½" DIA BALL REF
2 ¾" REF
5" REF
B
B
7/16" DIA REF
4
3
7
9
8
6
5
2
10

SECTION A-A

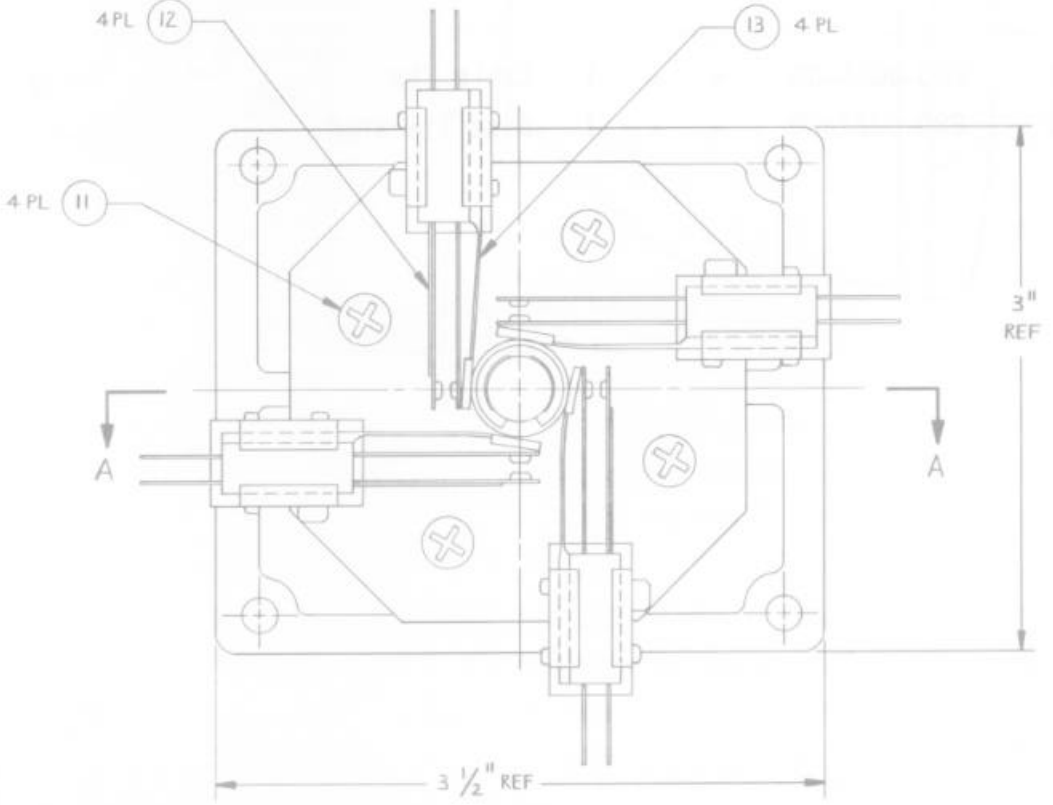
4 PL 12
13 4 PL
4 PL 11
3" REF
A
A
3 ½" REF

COLOR MONITOR ASSEMBLY DRAWING NUMBER 800-0362

ITEM NO.	PART NO.	QTY. REQD. -00	-01	-02	DESCRIPTION	REF DES.
1	See Below					
2	800-0369-01	-	-	1	Assy. Harness AC "Z"	
3	800-0369-00	1	1	-	Assy. Harness AC "Z"	
4	252-0175-00	1	1	1	Monitor Mounting Board	
5	282-0017-24	6	6	6	HEX HD Bolt 1/4-20 x 1.500 LG	
6	283-0060-34	12	12	12	Washer, 1/4 Flat	
7	283-0070-05	6	6	6	Nut-1/4 HEX Self-Locking	
8	800-0361-00	1	1	1	Assy. Harn. Video INTF	
9	470-0221-00	3	3	3	RES 220 OHM 1/4 W	See SH 2
10	470-0302-00	3	3	3	RES 3K 1/4 W	See SH 2
11	200-0019-00	-	1	-	CRT CL 19 IN. VT MT	
	200-0022-00	-	1	-	W/G CLR 19 IN. VT MT	
1	200-0019-00	1	-	-	CRT CL 19 IN. VT MT	
	200-0091-00	-	-	1	MON 19 IN. Vert. MT W/G	
12	280-0005-00	-	-	1	Cable Tie	
13	280-0327-00	-	-	1	Base Tie Wrap	

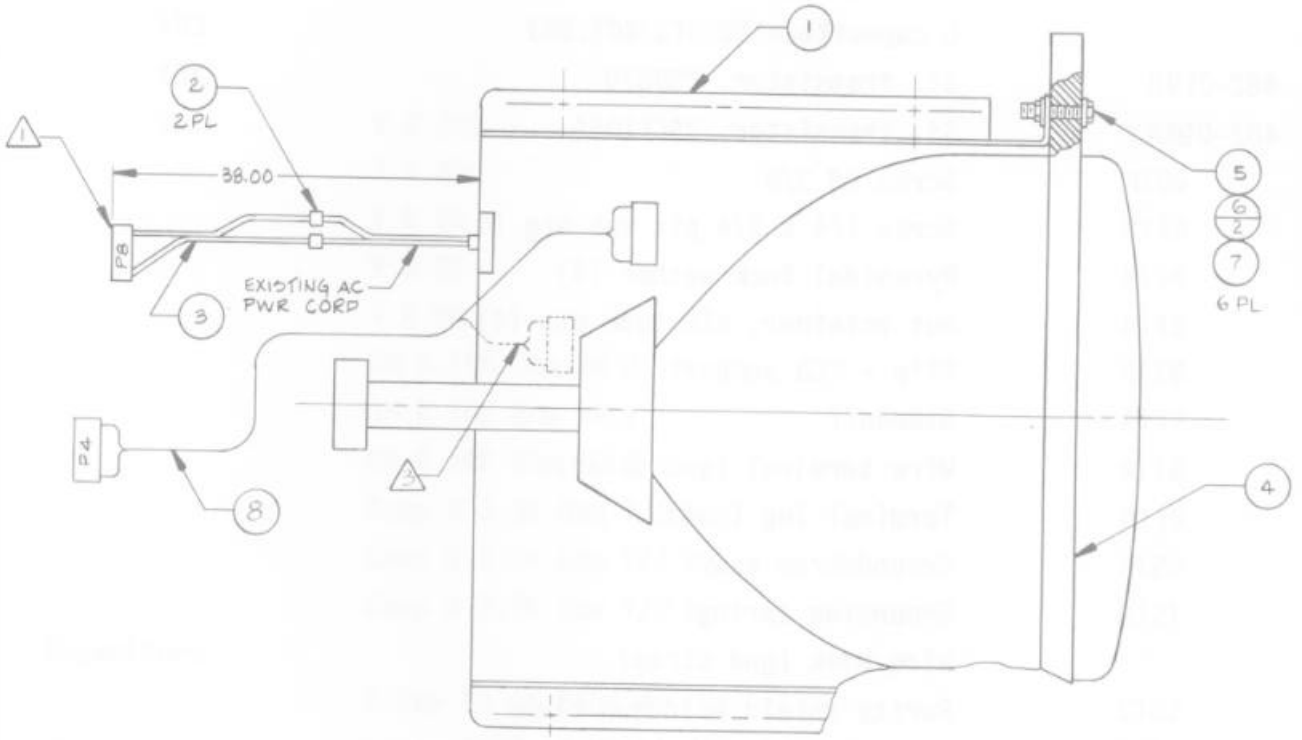
1
2
2 PL
38.00
P8
EXISTING AC
PWR CORD
3
P4
8
3
4
5
6
2
7
6 PL

OUTSIDE OF THE PCB ASSY

Part No.	Description	Ref. Des.
200-0667	Picture tube 19"	
200-0068	Deflection yoke	
113-0009	PC magnet	
560-0096	Flyback trans.	
	HVR	
	UNF resistor 220 Ohm, 25W K	R05
	C capacitor 150 pf, AC1.5KV	C04
482-0198	Si. transistor, 2SD870	X01
482-0143	Si. transistor, 2SC1106A	X02
	Screw #8 3/8	
	Screw 1/4 x 3/4 pix tub mtg (4)	
	Pyramidal lock washer (4)	
	Nut retainer, pix tube mtg (4)	
	Clip - PCB support	
	Standoff	
	Wire terminal (gnd strap)	
	Terminal lug (gnd)	
	Groundstrap assy	
	Grounding spring	
	Wire hook (gnd strap)	
	Purity shield holddown clamp	
	Support brkt RH	
	Support brkt LH	
	Chassis base	
	Yoke wedge (3)	

PURITY SHIELD ASSY

180-0022	Degaussing coil	D911, D912
481-0225	Rectifier 1 amp 600 V (2)	
	Pin Terminal (2)	

Part No.	Description	Ref. Des.
	Pin terminal housing	
	Purity shield (2 pcs)	
	Purity shield (2 pcs)	
	Capacitor 100 nf 10% 400V	C911
	Resistor, wirewound 33 Ohm, 4W	R921
	Fire retardant term strip 4 lug	
	CRT SOCKET PCB ASSY	
	V R 200	R105
	V R 200	R106
	V R 5K	R113
	V R 5K	R114
	V R 5K	R115
	OM R 10K Ohm 2W J	R116
	OM R 10K Ohm 2W J	R117
	OM R 10K Ohm 2W J	R118
	Comp R 3.3K Ohm 1/2 K	R119
	Comp R 3.3K Ohm 1/2 K	R120
	Comp R 3.3K Ohm 1/2 K	R121
Capacitors		
	E Cap 10 uf 250V A	C107
	C Cap 1000 pf DC1400V P	C108
Coils		
180-0023	Peaking coil	L101
Semiconductors		
482-0290	Si transistor, 2SC1514VC	X101
482-0290	Si transistor, 2SC1514VC	X102
482-0290	Si transistor, 2SC1514VC	X103
Miscellaneous		
213-0022	CRT socket	

Part No.	Description	Ref. Des
	MAIN PCB ASSY	
Resistors		
	V R 200 Ohm	R406
	V R 200 Ohm	R408
	CMF R 6.8 Ohm 1W J	R410
	OM R 3.3K Ohm 1W J	R414
	OM R 2.7K Ohm 1W J	R415
	OM R 12K Ohm 2W J	R421
	V R 10K Ohm	R422
	F R 68 Ohm 2W K	FR401
	CMF R 11.8K Ohm 1/4W + 1%	R503
	V R 5K Ohm	R504
	OM R 10K Ohm 2W J	R509
	OM R 8.2K Ohm 2W J	R512
	OM R 820 Ohm 2W J	R514
	CMF R 8.2 Ohm 1W J	R515
	CMF R 4.7 Ohm 1W J	R522
	OM R 68 Ohm 2W J	R523
	OM R 390 Ohm 1W J	R528
	ZN R 470 Ohm	R534
	ZN R	VR501
	CMF R 39 Ohm 1/2W + 1%	R703
	CMF R 7.68K Ohm 1/4 + 1%	R704
	Posistor	R901
	UNF R 2 Ohm 7W K	R902
	CMF R 4.7 Ohm 3W J	R903
	OM R 10K Ohm 2W J	R904
	OM R 18K Ohm 1W J	R905
	CMF R 47 Ohm 1/2W + 1%	Q908
	V R 2K Ohm	R909
	CMF R 2.74K Ohm 1/4 + 1%	R910
	F R 220 Ohm 1/2W K	FR901

MONITOR 19" VERTICAL - ELECTROHOME 607-907 DRAWING NUMBER 200-0019

Part No.	Description	Ref. Des
Capacitors		
	BPE Cap 3.3 uf 50V A	C301
	Tan cap 2.2 uf 16V K	C402
	E cap 4.7 uf 6.3V A	C407
	E cap 100 uf 160V A	C411
	E cap 3.3 uf 160V A	C412
	PP cap 5600 uf 50V J	C508
	PP cap 2000 pf DC1500V J	C512
	PP cap 2000 pf DC1500V J	C513
	PP cap 2000 pf DC1500V J	C514
	PP cap 0.53 uf DC1200V J	C515
	BPE cap 3.3 uf 50V A	C520
	E cap 1 uf 160V A	C523
	M cap 0.1 uf 200V K	C524
	PP cap 2000 pf DC1500V J	C531
	PP cap 1500 pf DC1500V J	C532
	E cap	C904
	E cap 10 uf 250V A	C905
Coils		
180-0024	Linarity coil	L502
181-0031	Width coil	L503
180-0025	Heater choke	L504
Transformers		
560-0061	Hor drive transf	T501
560-0097	Side pin transf	T503
Semiconductors		
316-0807	IC HA11244	IC501
482-0177	Si transistor, 2SC1685(R)	X101
482-0111	Si transistor, 2SA673(C)	X102
482-0177	Si transistor, 2SC1685(R)	X103
482-0111	Si transistor, 2SA673(C)	X104
482-0177	Si transistor, 2SC1685(R)	X105

Part No.	Description	Ref. Des
482-0111	Si transistor, 2SCA673(C)	X106
482-0177	Si transistor, 2SC1685(R)	X301
482-0177	Si transistor, 2SC1685(R)	X302
482-0111	Si transistor, 2SA673(C)	X303
482-0177	Si transistor, 2SC1685(R)	X304
482-0177	Si transistor, 2SC1685(R)	X305
482-0196	Si transistor, 2SD478	X401
482-0196	Si transistor, 2SD478	X402
482-0291	Si transistor, 2SC2610BK	X501
482-0257	Si transistor, 2SC2688 (KLM)	X901
482-0258	Si transistor, 2SC1890A (EF)	X902
481-0226	Si diode, W06A	D101
481-0226	Si diode, W06A	D102
481-0226	Si diode, W06A	D103
481-0149	Si diode, 1SZ473H	D301
481-0149	Si diode, 1SZ473H	D401
481-0227	Zener diode, RD10F(C)	D402
481-0171	Si diode, HF-1	D503
481-0228	Si diode, V09E	D504
481-0229	Zener diode, RD11E(B)	D505
581-0226	Si diode, W06A	D506
481-0230	Si diode, 1SS81	D507
481-0149	Si diode, 1SZ473H	D508
481-0231	Zener diode, RD20EV2	D701
481-0160	Si diode, 1S1887A	D901
481-0160	Si diode, 1S1887A	D902
481-0160	Si diode, 1S1887A	D903
481-0160	Si diode, 1S1887A	D904
481-0198	Zener diode, RD6.8EV3	D905
Miscellaneous		
	Fuse 1.25A	F901
	US fuse 3A	F902

MAIN P.C.B. COMPONENT LAYOUT

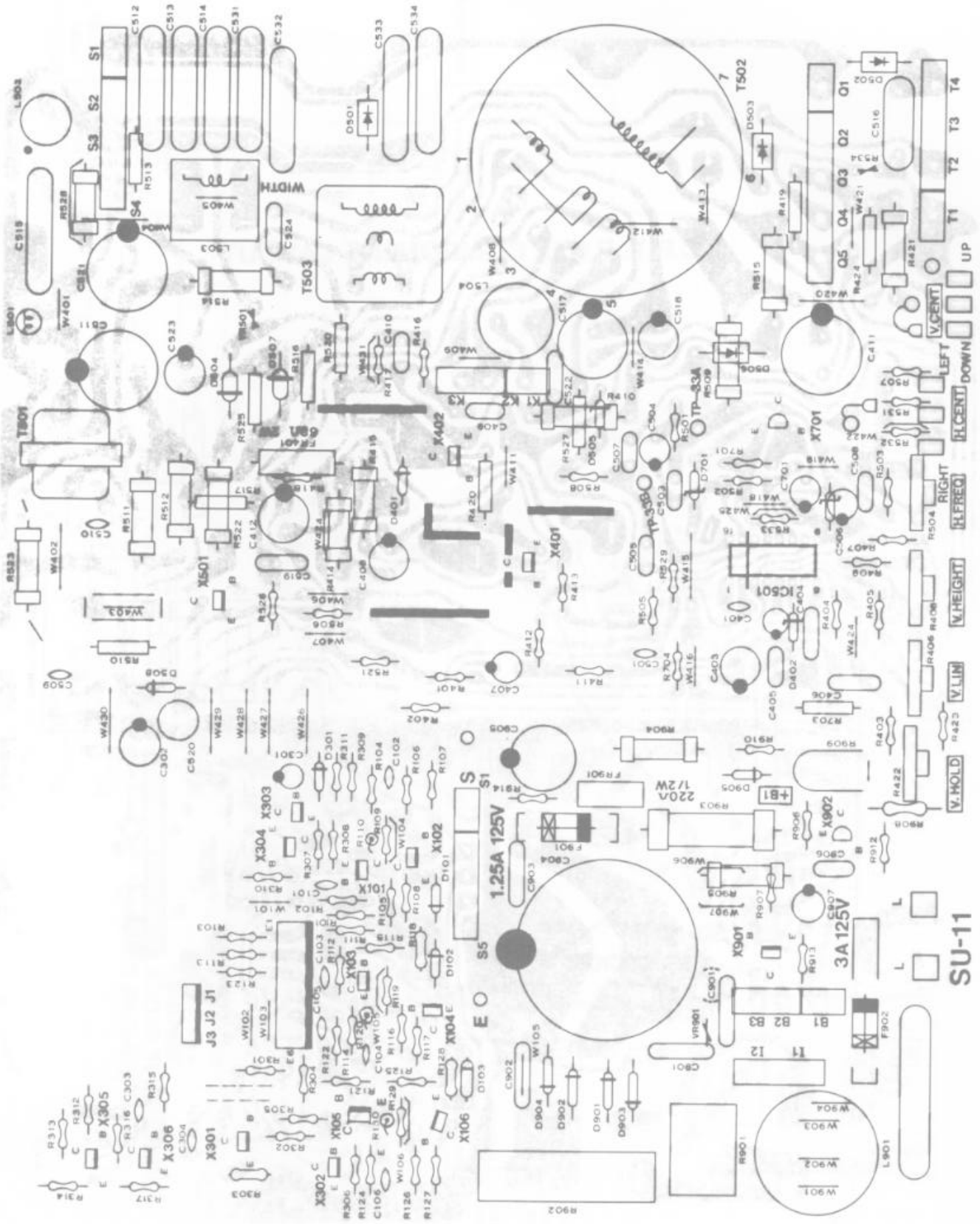

C.R.T. P.C.B. COMPONENT LAYOUT

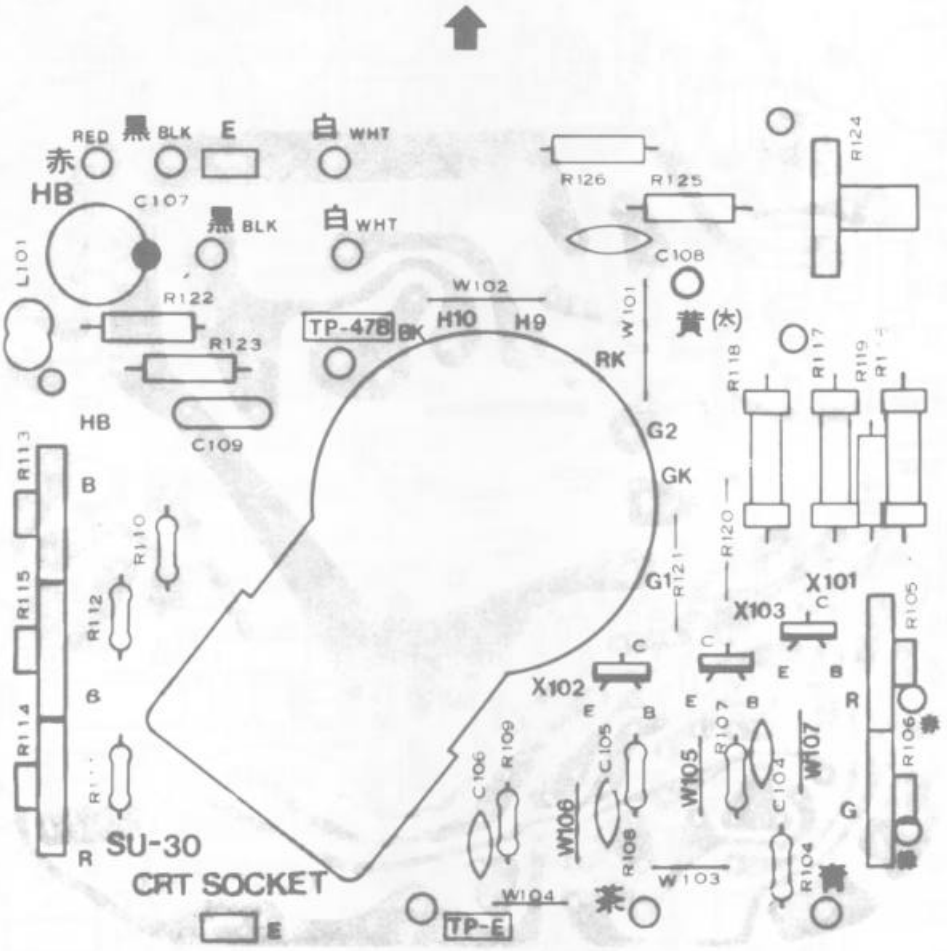

ELECTROHOME G07-907
FUNCTIONAL BLOCK DIAGRAM
200-0019

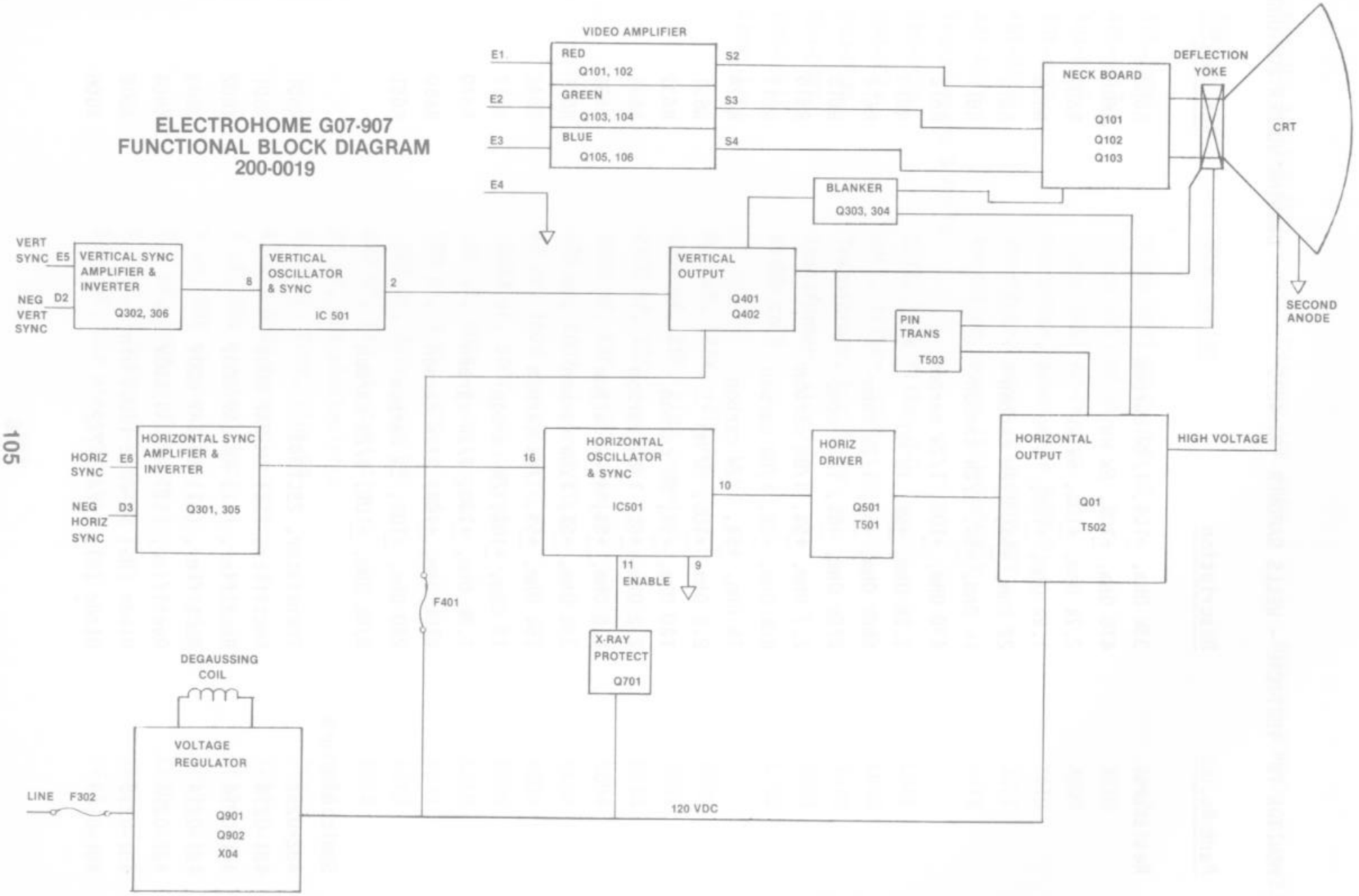

MONITOR 19" VERTICAL - WELLS GARDNER 19K 4675 DRAWING NUMBER 200-0022

Part No.	Description	Ref. Des
Resistors	33k Ohm, ±10%, 1/2W carbon	R603
	470 Ohm, ±10%, 5W WW	R606
	2.7k Ohm, ±10%, 5W WW	R607
	1.2k Ohm, ±10%, 1W MO	R608
	22 Ohm, ±5%, 1/8W carbon	R610
	1k Ohm, ±5%, 1/2W carbon	R611
	470 Ohm, ±10%, 1/2W carbon	R612
	1.2k Ohm, ±5%, 1W MO	R613
	680k Ohm, ±5%, 1/2W comp	R614
	270k Ohm, ±5%, 1/2W comp	R615
	2.7 Ohm, ±5%, 1/8W carbon	R616
	68k Ohm, ±5%, 1/8W carbon	R617
	1k Ohm, ±5%, 1/2W carbon	R624
	2.2 Ohm, ±10%, 5W MO	R631
	120 Ohm, ±5%, 5W carbon	R632
	2.2 Ohm, ±5%, 1/8W carbon	R634
	6.8 Ohm, ±5%, 1/2W carbon	R635
	33k Ohm, ±5%, 1/8W carbon	R641
	15k Ohm, ±5%, 1/8W carbon	R642
	15 Ohm, ±10%, 2W carbon	R647
	1.8k Ohm, ±10%, 1/2W carbon	R649
	270k Ohm, ±10%, 1/2W carbon	R650
	240 Ohm, ±10%, 2W carbon	R651
	6/8k Ohm, ±10%, 1/2W carbon	
Semiconductors		
482-0262	Transistor, 2SC1893	TR601
481-0214	Rectifier, (SI) RM-2AV 600V	X601
481-0214	Rectifier, (SI) RM-2AV 600V	X602
481-0214	Rectifier, (SI) RM-2AV 600V	X603
481-0214	Rectifier, (SI) RM-2AV 600V	X604
481-0215	Diode (HS) SB-2CGL 1200V min	X605
481-0149	Diode (SI) IS2473-772	X606

MONITOR 19" VERTICAL - WELLS GARDNER 19K 4675 DRAWING NUMBER 200-0022

Part No.	Description	Ref. Des
481-0216	Diode (HS) RC-2V 0.8 US	X607
481-0217	Diode (HS) RU-2V	X608
481-0217	Diode (HS) RU-2V	X609
481-0218	Rectifier, power (SI) 500V PIV	X610
481-0218	Rectifier, power (SI) 500V PIV	X611
481-0218	Rectifier, power (SI) 500V PIV	X612
Transformers & Coils		
180-0020	Coil, line filter R-3	L601
180-0014	Coil, filter, 10uh	L602
560-0094	Transformer, hor drive	T602
560-0095	Transformer, side PC	T603
180-0015	Width coil	L702
Capacitors		
	0.1 uf, 125V, ±20% MM	C601
	2200 pf, Z5F, ±10% ceramic	C602
	2200 pf, 125V ceramic	C603
	2200 pf, Z5F, ±10% ceramic	C604
	330 uf, 200V electrolytic	C605
	47 uf, 160V electrolytic	C608
	.0033 uf, 500V ±10% ceramic	C609
	.01 uf, 500V, ±10% ceramic	C610
	100 pf, 3 KV, ±10% ceramic	C611
	.022 uf, 200v, ±10% PP	C612
	220 uf, 25V electrolytic	C613
	33 uf, 25V electrolytic	C614
	0.39 uf, 200V, ±10% PP	C615
	47 pf, 500V ceramic	C616
	1 uf, 50v electrolytic	C617
	1 uf, 50V electrolytic	C619
	0.1 uf, 100V, ±10% mylar	C620
	0.1 uf, 1.5 KV, ±20% paper	C621
	1000 uf, 35V electrolytic	C622

Part No.	Description	Ref. Des
Capacitors (cont)	470 uf, 25V electrolytic	C623
	100 uf, 25V electrolytic	C624
	10 uf, 160V electrolytic	C625
	100 pf, 500V, ±10% ceramic	C626
	39 pf, 500V, ±10% ceramic	C627
	2200 pf, 500V, ±10% ceramic	C628
	6900 pf, 1.5 KV, ±5% PP	C629
	2.2 uf, 50V electrolyte	C633
	3 pf, 2 kV, ±0.5 pf ceramic	C637
	.056 uf, 10% mylar	C638
Miscellaneous		
	Fuse (UL/CSA) 3A-125	F601
	Socket, 6 pin	J607
	Plug, 3 pin (GT)	P602
	Plug, 4 pin (NM)	P604
	Plug, 6 pin (GT)	P607
	Plug, 3 pin (NM)	P608
	Plug, 2 pin (NM)	P611
	Thermistor	TH601
	Plug, 6 pin	P201
	Plug, 6 pin	P202
	VERT/HOR BOARD	
Resistors		
	820 Ohm, ±5%, 1/8W carbon	R301
	12k Ohm, ±5%, 1/8W carbon	R302
	15k Ohm, ±5%, 1/8W carbon	R303
	10k Ohm, ±5%, 1/8W carbon	R304
	330k Ohm, ±5%, 1/8W carbon	R305
	1k Ohm, ±5%, 1/8W carbon	R306
	1.5k Ohm, ±5%, 1/8W carbon	R307
	2.2k Ohm, ±5%, 1/8 carbon	R309

MONITOR 19" VERTICAL - WELLS GARDNER 19K 4675 DRAWING NUMBER 200-0022

Part No.	Description	Ref. Des
Resistors (cont)	470k Ohm, ±5%, 1/8W	R310
	56k Ohm, ±5%, 1/8W carbon	R311
	100k Ohm, ±5%, 1/8W carbon	R312
	10k Ohm, ±5%, 1/8W carbon	R313
	47k Ohm, ±5%, 1/8W carbon	R314
	820 Ohm, ±5%, 1/8W carbon	R315
	120 Ohm, ±5%, 1/2W carbon	R316
	2.2 Ohm, ±5%, 1/2W carbon	R317
	33k Ohm, ±5%, 1/4W carbon	R318
	10 Ohm, ±5%, 1/8W carbon	R319
	15k Ohm, ±5%, 1/8W carbon	R320
	560 Ohm, ±5%, 1/2W carbon	R321
	22 Ohm, ±5%, 2W MO	R322
	1.5 Ohm, ±5%, 1/8W carbon	R323
	27k Ohm, ±5%, 1/8W carbon	R234
	47 Ohm, ±5%, 1/8W carbon	R325
	820 Ohm, ±5%, 1/8W carbon	R328
	10k Ohm, ±5%, 1/8W carbon	R330
	220k Ohm, ±5%, 1/8W carbon	R331
	2.2k Ohm, ±5%, 1/8W carbon	R351
	15k Ohm, ±5%, 1/8W carbon	R352
	18k Ohm, ±5%, 1/8W carbon	R353
	3.9k Ohm, ±5%, 1/8W carbon	R354
	12k Ohm, ±5%, 1/8W carbon	R355
	470 Ohm, ±5%, 1/8W carbon	R356
	2.2k Ohm, ±5%, 1/8W carbon	R357
	1.2k Ohm, ±5%, 1/8W carbon	R358
	68k Ohm, ±5%, 1/8W carbon	R359
	27 Ohm, ±5%, 1/4W carbon	R360
	1.2k Ohm, ±5%, 1/8W carbon	R361
	1.2k Ohm, ±5%, 1/8W carbon	R363
	47k Ohm, ±5%, 1W MO	R364

Part No.	Description	Ref. Des
Resistors (cont)		
	56k Ohm, ±5%, 1/2W carbon	R365
	3.3k Ohm, ±5%, 1/8W carbon	R366
	2.2k Ohm, ±5%, 1/2W carbon	R367
	3.9k Ohm, ±5%, 1/8W carbon	R368
	3.3k Ohm, ±5%, 1/4W carbon	R369
	1k OHm, ±5%, 1/4W carbon	R370
	2.7k Ohm, ±5% 1/4W carbon	R371
	2.2k Ohm, ±5%, 1/4W carbon	R383
	8.2k Ohm, ±5%, 1/4W carbon	R384
	Varistor, 250k Ohm, vert hold	VR301
	Varistor, 20k Ohm, vert size	VR302
	Varistor, 50k Ohm, hor hold	VR351
Capacitors		
	0.15 uf, 50V ±10% mylar	C301
	0.222 uf, 50V, ±10% mylar	C302
	0.1 uf, 50V, ±10% mylar	C304
	2.2 uf, 50V electrolytic	C306
	0.15 uf, 50V, ±10% mylar	C307
	0.1 uf, 50V, ±10% myar	C309
	22 uf, 16V electrolytic	C310
	1000 uf, 35V electrolytic	C311
	0.0082 uf, 50V, ±10% ceramic	C312
	47 uf, 50V electrolytic	C313
	10 uf, 25V electrolytic	C315
	3300 uf, 50V, ±10% mylar	C316
	100 pf 50V, ±10% ceramic	C317
	1500 pf, 50V, ±10% ceramic	C351
	1000 pf, 50V, ±10% ceramic	C352
	0.022 uf, 50V, ±10% mylar	C353
	0.1 uf, 50V, ±10% mylar	C355
	4.7 uf, 25V electroytic	C356

MONITOR 19" VERTICAL - WELLS GARDNER 19K 4675 DRAWING NUMBER 200-0022

Part No.	Description	Ref. Des
Capacitors (cont)	0.015 uf, 200V, ±10% PP	C357
	0.018 uf, 200V, ±10% PP	C358
	4.7 uf, 160V electrolytic	C359
	0.01 uf, 50V, ±10% ceramic	C360
	0.015 uf, 50V, ±10% mylar	C361
	10 uf, 50V electrolytic	C362
	0.01 uf, 640V, ±10% PP	C363
	0.01 uf, 50V, ±10% ceramic	C364
Semiconductors		
482-0282	Transistor, 2SA826Q	TR301
482-0261	Transistor, 2SC1740Q	TR302
482-0283	Transistor, 2SA1740Q	TR303
482-0261	Transistor, 2SC1740Q	TR304
452-0284	Transistor, 2SA490YLBGLI	TR305
482-0285	Transistor, 2SC1625YLBGLI	TR306
482-0261	Transistor, 2SC1740R	TR307
482-0261	Transistor, 2SC1740Q	TR308
482-0117	Transistor, 2SA854Q	TR351
482-0286	Transistor, 2SC1722BKS	TR352
482-0261	Transistor, 2SC1740Q	TR353
482-0282	Transistor, 2SA826Q	TR354
481-0149	Diode (SI) IS2473-T72	X301
481-0149	Diode (SI) IS2473-T72	X302
481-0099	Diode (GE) IN60TVGL	X303
481-0219	Diode (SI) ISS81	X304
481-0219	Diode (SI) ISS81	X305
481-0219	Diode (SI) ISS81	X306
481-0220	Diode (SI) MA26W	X307
481-0149	Diode (SI) IS2473	X308
481-0149	Diode (SI) IS2473-T72	X351
481-0149	Diode (SI) IS2473-T72	X352
481-0149	Diode (SI) IS2473-T72	X53

MONITOR 19" VERTICAL - WELLS GARDNER 19K 4675 DRAWING NUMBER 200-0022

Part No.	Description	Ref. Des
481-0149	Diode (SI) IS2473-T72	X54
481-0221	Diode (Zener) RD10EBI	X355
481-0222	Diode (HS) RU-1 0.3 US	X366
Miscellaneous		
204X9300-958	Socket, 6 pin	J301
204X9300-958	Socket, 6 pin	J302
204X9601-195	Plug, 6 pin	P301
204X9601-195	Plug, 6 pin	P302
201X0000-534	Thermistor	TH301
Transformers & Coils		
101-0030	Coil, horiz osc	L351
	POWER BOARD	
Resistors		
	180 Ohm, ±10%m 15W WW	R501
	100 Ohm, ±5%, 1/8W carbon	R502
	1k Ohm, ±5%, 1/8W carbon	R503
	560 Ohm, ±5%, 1/8W carbon	R504
	39k Ohm, ±5%, 1W MO	R505
	6.8k Ohm, ±5%, 1/8W carbon	R506
	Varistor volt adj	VR501
Capacitors		
	10 uf, 160V electrolytic	C501
	1500 pf, 50V, ±10% ceramic	C502
	22 uf, 16V electrolytic	
Semiconductors		
482-0261	Transistor, 2SC1740Q	TR501
482-0288	Transistor, 2SC1454	TR502
481-0135	Diode (SI) zener EQB01-06V	X501
481-0149	Diode (SI) IS2473-T72	X502
Miscellaneous		
	Socket, 6 pin	J501

MONITOR 19" VERTICAL - WELLS GARDNER 19K 4675 DRAWING NUMBER 200-0022

Part No.	Description	Ref. Des
	Plug, 6 pin	P501
	Thermister	TH501
	NECK BOARD	
Resistors		
	1.8k Ohm, ±5%, 1/8W carbon	R401
	1.8k Ohm, ±5%, 1/8W carbon	R402
	1.8k Ohm, ±5%, 1/8W carbon	R403
	150 Ohm, ±5%, 1/8W carbon	R404
	220 Ohm, ±5%, 1/8W carbon	R405
	150 Ohm, ±5%, 1/8W carbon	R406
	390 Ohm, ±5%, 1/4W carbon	R407
	390 Ohm, ±5%, 1/4W carbon	R408
	4.7k Ohm, ±5%, 1/8W carbon	R409
	4.7k Ohm, ±5%, 1/8W carbon	R410
	4.7k Ohm, ±5%, 1/8W carbon	R411
	12k Ohm, ±5%, 2.0W metal oxide	R412
	12k Ohm, ±5%, 2.0W metal oxide	R413
	12k Ohm, ±5%, 2.0W metal oxide	R414
	2.7k Ohm, ±10%, 1/2W comp	R415
	2.7k Ohm, ±10%, 1/2W comp	R416
	2.7k Ohm, ±10%, 1/2W comp	R417
	470k Ohm, ±10%, 1/2W comp	R418
	330k Ohm, ±10%, 1/2W comp	R419
	1.0 Ohm, ±10%, 2W metal oxide	R422
	270 Ohm, ±5%, 1/4W carbon	R423
	500 Ohm varistor R drive	VR401
	500 Ohm varistor B drive	VR402
	5k Ohm varistor R cutoff	VR403
	5k Ohm varistor G cutoff	VR404
	5k Ohm varistor B cutoff	VR405
	1M Ohm varistor screen	VR406

MONITOR 19" VERTICAL - WELLS GARDNER 19K 4675 DRAWING NUMBER 200-0022

Part No.	Description	Ref. Des
Capacitors		
	1000 pf, 50V, 10% ceramic	C401
	1000 pf, 50V, 10% ceramic	C402
	1000 pf, 50V, 10% ceramic	C403
	1500 pf, 2 kV ±10% ceramic	C404
	100 pf, 12 kV, ±10% ceramic	C405
	.01 uf, 500V, ±10% ceramic	C406
	1500 pf, 2 kV, ±10% ceramic	C407
	68 pf, 50V, ±10% ceramic	C408
	68 pf, 50V, ±10% ceramic	C409
	68 pf, 50V, ±10% ceramic	C410
Semiconductors		
482-0155	Transistor, 2SC1514 (R output)	TR401
482-0155	Transistor, 2SC1514 (G output)	TR402
482-0155	Transistor, 2SC1514 (B output)	TR403
481-0223	Diode, IS2367 (B output)	X404
481-0223	Diode, IS2367 (protector)	X405
481-0223	Diode, IS2367 (protector)	X406
Miscellaneous		
	Socket, 5 pin	J401
	Socket, 3 pin	J402
	Plug, 5 pin	P401
	Plug, 3 pin	P402
800-3253 High Voltage Assembly (T7010)		
	6.8 Ohm, ±10% 15W WW resistor	R701
220-0223	Focus control	VR702
	Diode (SI HV))	X701
	Diode (SI HV)) Part of T701	X702
	Diode (SI HV))	X703

Part No.	Description	Ref. Des.
Final Assembly Parts		
200-0020	19VJTP22 pix tube	
800-3254	Assy purity shld/degaussing	
800-3255	Lateral/purity assembly	
200-0066	Yoke, deflection	
213-0021	CRT socket	
800-3253	HV unit (T701)	
	Plug, line cord (K4625, K4675, K4677)	
	Plug, line cord (K4626, K4676)	
180-0021	Degaussing coil (L701)	
	INTERFACE FACE BOARD (P317)	
Resistors		
	91 Ohm ±5%, 1/2W carbon	R201
	22k Ohm, ±10%, 1/4W carbon	R202
	1k Ohm, ±5%, 1/2W carbon	R203
	100 Ohm, ±5%, 1/4W carbon	R204
	100k Ohm, ±5%, 1/4W carbon	R205
	330 Ohm, ±10%, 1/2W carbon	R206
	2.2k Ohm, ±5%, 1/4W carbon	R207
	2.2k Ohm, ±5%, 1/4W carbon	R208
	100k Ohm, ±5%, 1/4W carbon	R209
	100 Ohm, ±5%, 1/4W carbon	R210
	220 Ohm, ±5%, 1/4W carbon	R211
	220 Ohm, ±5%, 1/4W carbon	R212
	220 Ohm ±5%, 1/4W carbon	R213
	150 Ohm, ±5%, 1/4W carbon	R214
	150 Ohm, ±5%, 1/4W carbon	R215
	150 Ohm, ±5%, 1/4W carbon	R216
	100 Ohm, ±5%, 1/4W carbon	R217
	1k Ohm, ±5%, 1/2W carbon	R218
	1k Ohm, ±5%, 1/2W carbon	R219
	680 Ohm, ±5%, 1/2W carbon	R220

MONITOR 19" VERTICAL - WELLS GARDNER 19k 4675 DRAWING NUMBER 200-0022

Part No.	Description	Ref. Des.
Resistors (cont)	270 Ohm, ±5%, 1/2W carbon	R221
	270 Ohm, ±5%, 1/2W carbon	R222
	100k Ohm, ±5%, 1/4W carbon	R223
	1k Ohm, ±5%, 1/2W carbon	R224
	8.2k Ohm, ±5%, 1/4W carbon	R225
	8.2k Ohm, ±5%, 1/4W carbon	R226
	8.2k Ohm, ±5%, 1/4W carbon	R227
	390 Ohm, ±5%, 1/2W carbon	R228
	1.5k Ohm black level control	VR201
	10k Ohm horizontal centering	VR202
Capacitors		
	1000 uf, 16V electrolytic	C201
	470 uf, 16V lytic	C202
	.022 uf, 10% 100V	C203
	680 pf, 10%, Z5F	C204
	.01 uf, 10%, 100V	C205
Semiconductors		
482-0030	Transistor (NPN) 2N3904	TR201
482-0030	Transistor (NPN) 2N3904	TR202
482-0030	Transistor (NPN) 2N3904	TR203
482-0289	Transistor (PNP) MPS-A70	TR204
482-0289	Transistor (PNP) MPS-A70	TR205
482-0289	Transistor (PNP) MPS-A70	TR206
482-0030	Transistor (NPN) 2N3904	TR207
482-0030	Transistor (NPN) 2N3904	TR208
482-0030	Transistor (NPN) 2N3904	TR209
482-0030	Transistor (NPN) 2N3904	TR210
481-0224	Diode silicon FDH-444	X201
481-0224	Diode silicon FDH-444	X202
481-0224	Diode silicon FDH-444	X203
481-0224	Diode silicon FDH-444	X204
481-0014	Diode, zener 3.9V, 5%, 0.5W IN5228B	ZD201

MONITOR 19" VERTICAL - WELLS GARDNER 19K 4675 DRAWING NUMBER 200-0022

Part No.	Description	Ref. Des.
Miscellaneous		
	Socket, 6 pin	J201
	Socket, 6 pin	J202
	Plug, 4 pin	P203
	Plug, 3 pin	P204
	Plug, 6 pin	P205
Resistors		
	91 Ohm ±5%, 1/2W carbon	R201
	22k Ohm, ±10%, 1/4W carbon	R202
	1k Ohm, ±5%, 1/2W carbon	R203
	100 Ohm, ±5%, 1/4W carbon	R204
	100k Ohm, ±5%, 1/4W carbon	R205
	330 Ohm, ±10%, 1/2W carbon	R206
	2.2k Ohm, ±5%, 1/4W carbon	R207
	2.2k Ohm, ±5%, 1/4W carbon	R208
	100k Ohm, ±5%, 1/4W carbon	R209
	100 Ohm, ±5%, 1/4W carbon	R210
	200 Ohm, ±5%, 1/4W carbon	R211
	200 Ohm, ±5%, 1/4W carbon	R212
	200 Ohm ±5%, 1/4W carbon	R213
	200 Ohm, ±5%, 1/4W carbon	R214
	200 Ohm, ±5%, 1/4W carbon	R215
	200 Ohm, ±5%, 1/4W carbon	R216
	100 Ohm, ±5%, 1/4W carbon	R217
	1k Ohm, ±5%, 1/2W carbon	R218
	1k Ohm, ±5%, 1/2W carbon	R219
	1k Ohm, 5%, 1/2W carbon	R220
	200 Ohm, 5%, 1/2W carbon	R221
	200 Ohm, 5%, 1/2W carbon	R222
	100k Ohm, 5%, 1/4W carbon	R223
	680k Ohm, 5%, 1/2W carbon	R224
	8.2k Ohm, 5%, 1/4W carbon	R225

MONTIOR 19" VERTICAL - WELLS GARDNER 19K 4675 DRAWING NUMBER 200-0022

Part No.	Description	Ref. Des.
Resistors (cont)	8.2k Ohm, 5%, 1/4W carbon	R226
	8.2k Ohm, 5%, 1/4W carbon	R227
	390 Ohm, 5%, 1/2W carbon	R228
	1.5k Ohm black level control	VR201
	10k Ohm horizontal centering	VR202
Capacitors		
	1000 uf, 16V electrolytic	C201
	470 uf, 16V lytic	C202
	.022 uf, 10% 100V	C203
	680 pf, 10%, Z5F	C204
	.01 uf, 10%, 100V	C205
Semiconductors		
482-0030	Transistor (NPN) 2N3904	TR201
482-0030	Transistor (NPN) 2N3904	TR202
482-0030	Transistor (NPN) 2N3904	TR203
482-0289	Transistor (PNP) MPS-A70	TR204
482-0289	Transistor (PNP) MPS-A70	TR205
482-0289	Transistor (PNP) MPS-A70	TR206
482-0030	Transistor (NPN) 2N3904	TR207
482-0030	Transistor (NPN) 2N3904	TR208
482-0030	Transistor (NPN) 2N3904	TR209
482-0030	Transistor (NPN) 2N3904	TR210
481-0224	Diode silicon FDH-444	X201
481-0224	Diode silicon FDH-444	X202
481-0224	Diode silicon FDH-444	X203
481-0224	Diode silicon FDH-444	X204
481-0014	Diode, zener 3.9V, 5%, 0.5W IN5228B	ZD201
Miscellaneous		
	Socket, 6 pin	J201
	Socket, 6 pin	J202
	Plug, 4 pin	P203
	Plug, 3 pin	P204
	Plug, 6 pin	P205

P.C. BOARD LAYOUT

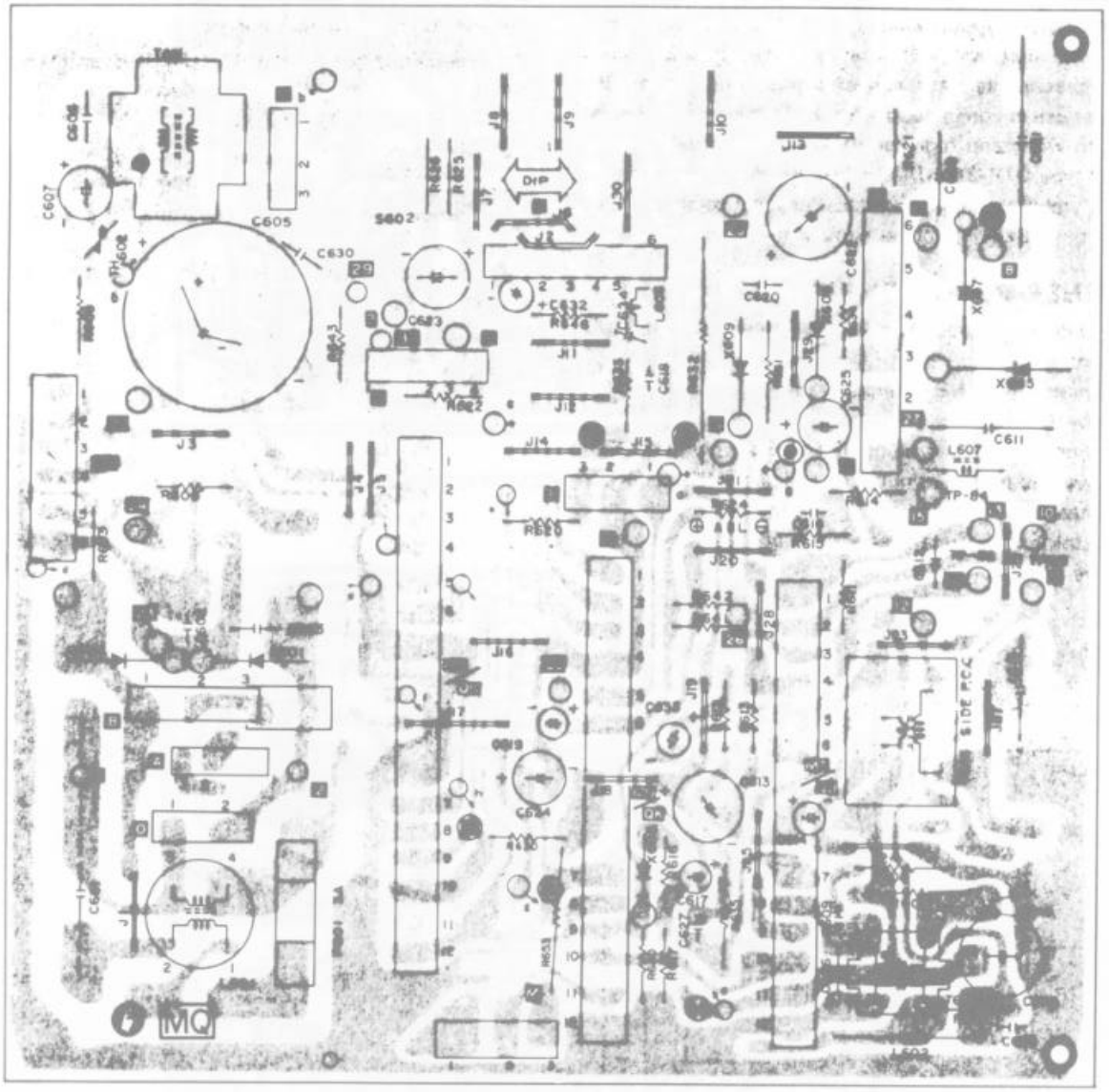

P.C. BOARD LAYOUT

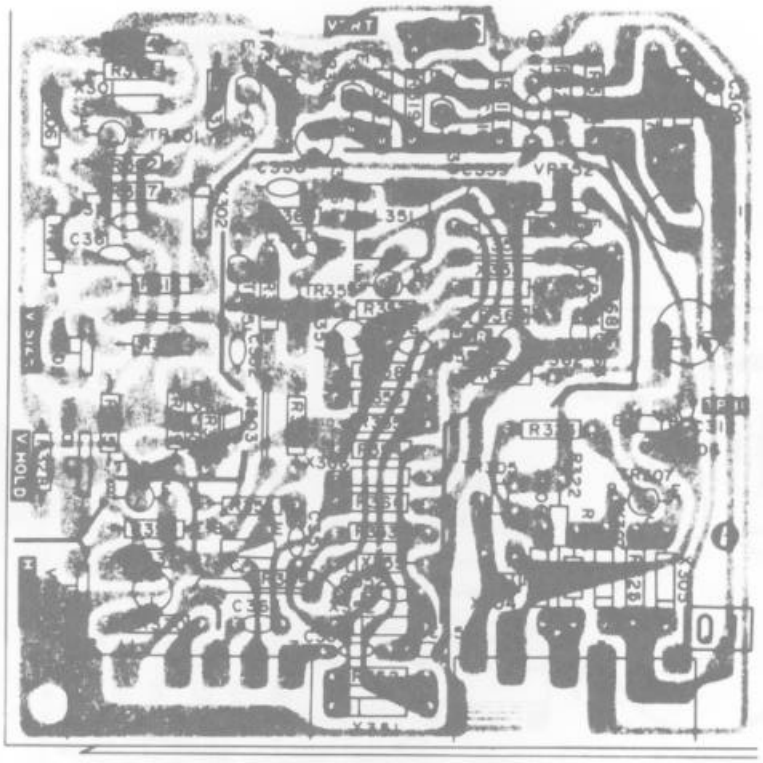

FIGURE 15. HORIZ/VERT P.C. BOARD

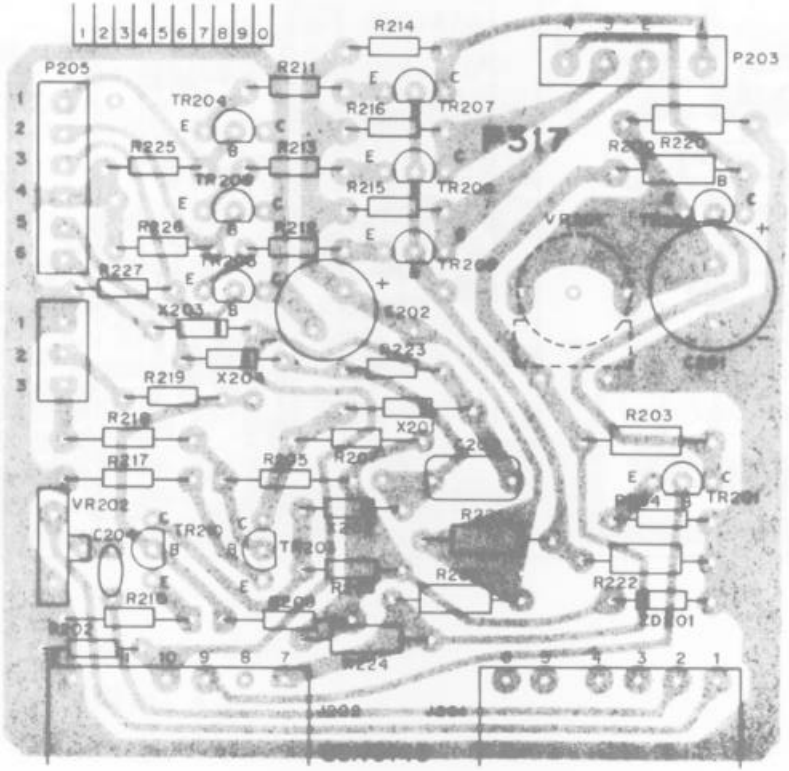

P.C. BOARD LAYOUT

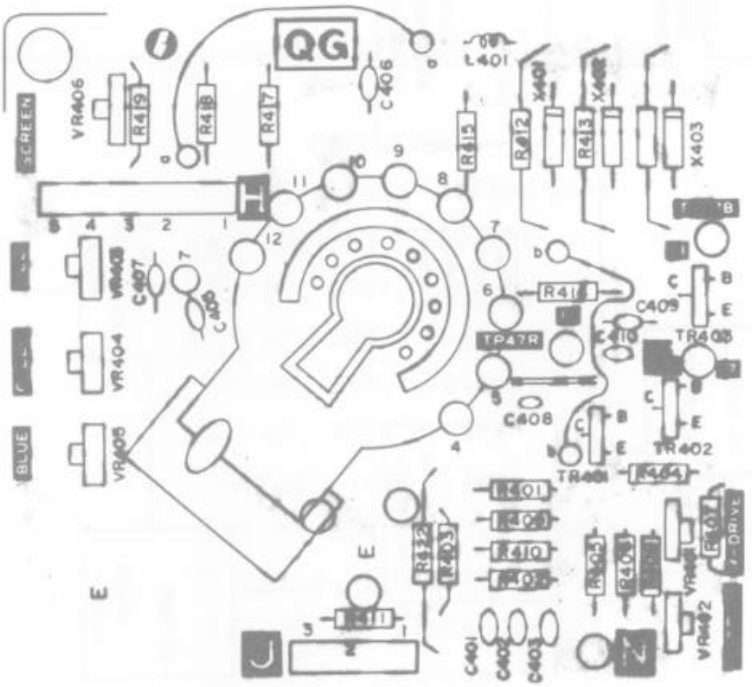

FIGURE 13. NECK P.C. BOARD

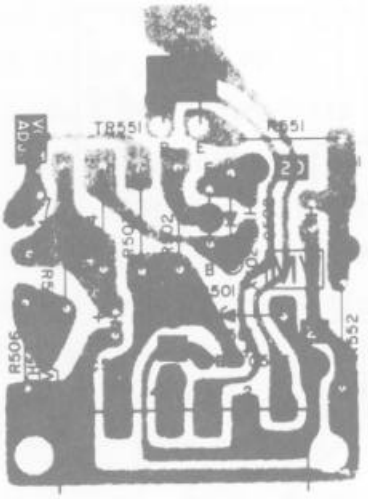

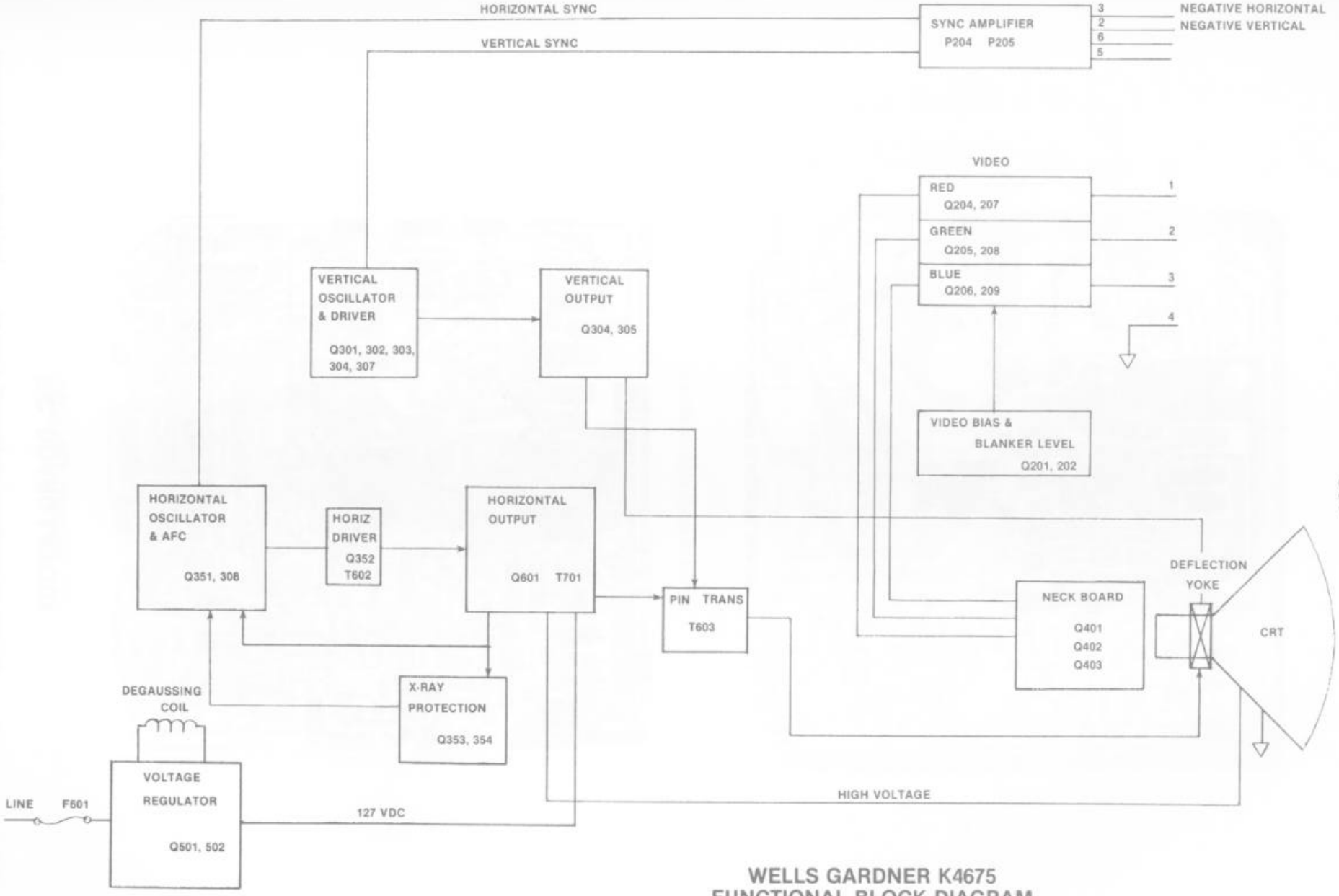

WELLS GARDNER K4675
FUNCTIONAL BLOCK DIAGRAM
200-0022

MONITOR 19" VERTICAL - WELLS GARDNER DRAWING NUMBER 200-0091

MAIN BOARD

ITEM NO.	PART NO.	DESCRIPTION	REF. DESG.
		CAPACITORS	
1		1000 uF, 16V, Electrolytic	C201
2		330 pF, 500V, Ceramic	C202
3		220 pF, 500V, Ceramic	C203
4		220 pF, 500V, Ceramic	C204
5		470 uF, 16V, Electrolytic	C205
6		0.1 uF, 125V Mylar	C206
7		.022 uF, 100V Mylar	C207
8		330 uF, 50V Electrolytic	C301
9		0.033 uF, 50V Mylar	C302
10		3.3 uF, 50V Electrolytic	C303
11		0.068 pF, 50V Mylar	C304
12		2.2 uF, 16V Tantal	C306
13		0.033 uF, 50V Mylar	C307
14		3.3 uF, 50V Electrolytic	C308
15		0.068 uF, 100V PP	C309
16		10 uF, 100V Electrolytic	C310
17		10 uF, 160V Electrolytic	C311
18		1000 pF, 500V Ceramic	C312
19		47 uF, 160V Electrolytic	C313
20		0.033 uF, 200V PP	C314
21		1 uF, 50V Electrolytic	C315
22		1 uF, 50V Electrolytic	C351
23		47 uF, 25V Electrolytic	C352
24		0.0082 pF, 50V Mylar-PP	C353
25		47 uF, 25V Electrolytic	C354
26		0.0068 pF, 50V Mylar	C355
27		0.01 uF, 500V Ceramic	C356
28		100 pF, 500V Ceramic	C359
29		0.0033 pF, 500V Ceramic	C360

MAIN BOARD

ITEM NO.	PART NO.	DESCRIPTION	REF. DESG.
		CAPACITORS	
30		0.01 uF, 500V Ceramic	C361
31		0.01 uF, 50V Ceramic	C362
32		8700 pF, 1.5 KV PP	C363
33		0.33 uF, 200V PP	C365
34	150-0074	22 uF, 25V Electrolytic	C366
35		6 uF, 500V Ceramic	C367
36		0.01 uF, 50V Ceramic	C368
37		0.1 uF, 100V PP	C372
38		470 uF, 500V Ceramic	C380
39		0.1 uF, 125V Mylar	C501
40		1500 pF, 500V Ceramic	C502
41		2200 pF, 125V Ceramic	C503
42		2200 pF, 125V Ceramic	C504
43		560 uF, 200V Electrolytic	C505
44		22 uF, 160V Electrolytic	C506
45		47 uF, 160V Electrolytic	C507
46		1000 uF, 25V Electrolytic	C701
47		10 uF, 100V Electrolytic	C702
48		1000 pF, 500V Ceramic	C703

MONITOR 19" VERTICAL - WELLS GARDNER DRAWING NUMBER 200-0091

MAIN BOARD

ITEM NO.	PART NO.	DESCRIPTION	REF. DESG.
		RESISTORS	
1		1K Ohm, 5%, 1/4W Carbon	R201
2		30 Ohm, 5%, 1/4W Carbon	R202
3		100 Ohm, 5%, 1/4W Carbon	R203
4		100 Ohm, 5%, 1/2W Carbon	R204
5		270 Ohm, 5%, 1/2W Carbon	R205
6		390 Ohm, 5%, 1/4W Carbon	R206
7		200 Ohm, 5%, 1/4W Carbon	R207
8		390 Ohm, 5%, 1/4W Carbon	R208
9		200 Ohm, 5%, 1/4W Carbon	R209
10		390 Ohm, 5%, 1/4W Carbon	R210
11		200 Ohm, 5%, 1/4W Carbon	R211
12		1K Ohm, 5%, 1/4W Carbon	R214
13		100K Ohm, 5%, 1/4W Carbon	R215
14		1K Ohm, 5%, 1/4W Carbon	R216
15		100 Ohm, 5%, 1/4W Carbon	R217
16		1K Ohm, 5%, 1/4W Carbon	R218
17		100K Ohm, 5%, 1/4W Carbon	R219
18		1K Ohm, 5%, 1/4W Carbon	R220
19		100 Ohm, 5%, 1/4W Carbon	R221
20		3.3 Ohm, 5%, 1/4W Carbon	R222
21		10 Ohm, 5%, 1/4W Carbon	R224
22		10 Ohm, 5%, 1/4W Carbon	R225
23		10 Ohm, 5%, 1/4W Carbon	R226
24		47K Ohm, 5%, 1/4W Carbon	R227
25		1K Ohm, 5%, 1/4W Carbon	R228
26		270 Ohm, 5%, 1/2W Carbon	R229
27		8.2K Ohm, 5%, 1/2W Comp.	R230
28		8.2K Ohm, 5%, 1/2W Comp.	R231
29		8.2K Ohm, 5%, 1/2W Comp.	R232

MAIN BOARD

ITEM NO.	PART NO.	DESCRIPTION	REF. DESG.
		RESISTORS	
30		180 Ohm, 5%, 1/4W Carbon	R233
31		82 Ohm, 5%, 1/4W Carbon	R234
32		82 Ohm, 5%, 1/4W Carbon	R235
33		82 Ohm, 5%, 1/4W Carbon	R236
34		270 Ohm, 5%, 1/4W Carbon	R301
35		8.2K Ohm, 5%, 1/4W Carbon	R302
36		8.2K Ohm, 5%, 1/4W Carbon	R303
37		2.2K Ohm, 5%, 1/4W Carbon	R304
38		6.8K Ohm, 5%, 1/4W Carbon	R305
39		7.5K Ohm, 5%, 1/4W Carbon	R306
40		5.6K Ohm, 5%, 1/4W Carbon	R307
41		22K Ohm, 5%, 1/4W Carbon	R309
42		39K Ohm, 5%, 1/4W Carbon	R310
43		3.3K Ohm, 5%, 1/4W Carbon	R311
44		4.7K Ohm, 5%, 1/4W Carbon	R312
45		1K Ohm, 5%, 5W Carbon	R313
46		220 Ohm, 5%, 1/4W Carbon	R314
47		10 Ohm, 5%, 1/4W Carbon	R315
48		3.3K Ohm, 5%, 1/4W Carbon	R316
49		12 Ohm, 5%, 1/2W Carbon	R317
50		390 Ohm, 5%, 1/4W Carbon	R318
51		1K Ohm, 5%, 1/4W Carbon	R319
52		33K Ohm, 5%, 1/4W Carbon	R320
53		270K Ohm, 5%, 1/2W Carbon	R321
54		10K Ohm, 5%, 1/4W Carbon	R322
55		10K Ohm, 5%, 1/4W CArbon	R351
56		3.9K Ohm, 5%, 1/4W Carbon	R352
57		68K Ohm, 5%, 1/4W Carbon	R353
58		3.3K Ohm, 5%, 1/4W Carbon	R354

MAIN BOARD

ITEM NO.	PART NO.	DESCRIPTION	REF. DESG.
		RESISTORS	
59		6.8K Ohm, 5%, 3W Metal Oxide	R355
60		56K Ohm, 5%, 1/2W Carbon	R358
61		470 Ohm, 5%, 1/4W Carbon	R360
62		10K Ohm, 5%, 1/4W Carbon	R361
63		1.8K Ohm, 5%, 1W Metal Oxide	R362
64		3.9K Ohm, 5%, 7W Metal Oxide	R363
65		22 Ohm, 5%, 1/4W Carbon	R364
66		33K Ohm, 5%, 1/4W Carbon	R365
67		10K Ohm, 5%, 1/4W Carbon	R367
68		330K Ohm, 5%, 1/2W Comp.	R368
79		680K Ohm, 5%, 1/2W Comp.	R369
70		33K Ohm, 5%, 1/4W Carbon	R370
71		1K Ohm, 5%, 1W Metal Oxide	R371
72		12K Ohm, 5%, 1W Metal Oxide	R372
73		6.8K Ohm, 5%, 1/2W Carbon	R375
74		270 Ohm, 5%, 2W Metal Oxide	R376
75		150 Ohm, 5%, 1/4W Carbon	R377
76		10K Ohm, 5%, 1/4W Carbon	R378
77		10K Ohm, 5%, 1/4W Carbon	R379
78		8.2K Ohm, 5%, 1/4W Carbon	R380
79		2.2K Ohm, 5%, 1W Metal Oxide	R381
80		150 Ohm, 5%, 1W Metal Oxide	R383
81		10K Ohm, 5%, 1/4W Carbon	R502
82		150 Ohm, 5%, 15W Metal Oxide	R503
83		47 Ohm, 5%, 1W Metal Oxide	R504
84		2.2K Ohm, 5%, 1/4W Carbon	R505
85		15 Ohm, 5%, 2W Metal Oxide	R506
86		330K Ohm, 5%, 1/2W Comp.	R507
87		3.3 Ohm, 5%, 10W WW	R601

MAIN BOARD

ITEM NO.	PART NO.	DESCRIPTION	REF. DESG.
		RESISTORS	
88		2.2 Ohm, 5%, 2W Metal Oxide	R701
89		2.2 Ohm, 5%, 1/2W Carbon	R702
90		2K Ohm-B Semi-Fixed	VR201
91		5K Ohm-B Semi-Fixed	VR301
92		500 Ohm-B Semi-Fixed	VR303
93		2K Ohm-B Semi-Fixed	VR351
94		2K Ohm-B Semi-Fixed	VR352

MONITOR 19" VERTICAL - WELLS GARDNER DRAWING NUMBER 200-0091

MAIN BOARD

ITEM NO.	PART NO.	DESCRIPTION	REF. DESG.
		SEMICONDUCTORS	
1	481-0175	Diode, IS2076-27	D203
2	481-0175	Diode, IS2076-27	D204
3	481-0175	Diode, IS2076-27	D205
4	481-0175	Diode, IS2076-27	D206
5	481-0175	Diode, IS2076-27	D207
6	481-0175	Diode, IS2076-27	D208
7	481-0175	Diode, IS2076-27	D209
8	481-0219	Diode, ISS81	D301
9	481-0175	Diode, IS2076-27	D302
10	481-0175	Diode, IS2076-27	D303
11	481-0244	Diode, RH-IV	D304
12	481-0244	Diode, RH-IV	D305
13	481-0175	Diode, IS2076-27	D306
14	481-0245	Diode, RM-1AV	D501
15	481-0245	Diode, RM-1AV	D502
16	481-0245	Diode, RM-1AV	D503
17	481-0245	Diode, RM-1AV	D504
18	481-0245	Diode, RM-1AV	D505
19	481-0245	Diode, RM-1AV	D506
20	481-0217	Diode, RU-2V	D701
21	481-0244	Diode, RH-1V	D702
22	482-0160	Transistor (NPN) 2SC1815GR	Q201
23	482-0160	Transistor (NPN) 2SC1815GR	Q202
24	482-0301	Transistor (PNP) 2SA562-Y-TM	Q203
25	482-0301	Transistor (PNP) 2SA562-Y-TM	Q204
26	482-0301	Transistor (PNP) 2SA562-Y-TM	Q205
27	482-0160	Transistor (NPN) 2SC1815GR	Q206
28	482-0160	Transistor (NPN) 2SC1815GR	Q207
29	482-0160	Transistor (NPN) 2SC1815GR	Q208

MAIN BOARD

ITEM NO.	PART NO.	DESCRIPTION	REF. DESG.
		SEMICONDUCTORS	
30	482-0302	Transistor (NPN) 2SC1851GR	Q209
31	482-0302	Transistor (NPN) 2SC1851GR	Q210
32	482-0302	Transistor (NPN) 2SC1851GR	Q301
33	482-0161	Transistor (NPN) 2SC2073LBGL2	Q302
34	482-0161	Transistor (NPN) 2SC2073LBGL2	Q303
35	482-0303	Transistor (NPN) 2SC2482BK	Q351
36	482-0202	Transistor (NPN) 2SD898B	Q352
37	313-0132	IC HA11423	IC301
38	313-0129	IC STR381	IC501

MONITOR 19" VERTICAL - WELLS GARDNER DRAWING NUMBER 200-0091

MAIN BOARD

ITEM NO.	PART NO.	DESCRIPTION	REF. DESG.
		TRANSFORMERS & COILS	
1	181-0035	Coil, (RF Choke)	L351
2	181-0036	Coil, Horiz., Size	L352
3	181-0037	Coil, Adg.	L701
4	560-0121	Transformer, Hor. Drive	T351
5	560-0122	HV-Unit M-11	T352

MONITOR 19" VERTICAL - WELLS GARDNER DRAWING NUMBER 200-0091

MAIN BOARD

ITEM NO.	PART NO.	DESCRIPTION	REF. DESG.
		MISCELLANEOUS	
1		Fuse, 4 Amp. 125V	F501
2		Recap W Wire 3P-M-BG	J402
3		Plug, PWB 3P-J	P201
4		Plug, PWB 6P-Q	P202
5		Plug, PWB 4P-B	P401
6		Plug, PWB 2P-B	P501
7		Plug, PWB 4P-C	P601
8	478-0012	Thermistor	TH501

MONITOR 19" VERTICAL - WELLS GARDNER DRAWING NUMBER 200-0091

MAIN BOARD

ITEM NO.	PART NO.	DESCRIPTION	REF. DESG.
		FINAL ASSEMBLY	
1	200-0093	19VLTP22 Pix Tube	
2	834-5030	Lateral/Purity Assembly	
3	200-0092	Yoke Deflection	
4	834-5031	CRT Socket	
5	181-0038	Automatic Degaussing Coil Unit	

MONITOR 19" VERTICAL - WELLS GARDNER DRAWING NUMBER 200-0091

NECK BOARD

ITEM NO.	PART NO.	DESCRIPTION	REF. DESG.
		RESISTORS	
1		220 Ohm, 5%, 1/4W Carbon	R401
2		390 Ohm, 5%, 1/4W Carbon	R402
3		820 Ohm, 5%, 1/4W Carbon	R403
4		220 Ohm, 5%, 1/4W Carbon	R404
5		390 Ohm, 5%, 1/4W Carbon	R405
6		820 Ohm, 5%, 1/4W Carbon	R406
7		470 Ohm, 5%, 1/4W Carbon	R407
8		270 Ohm, 5%, 1/4W Carbon	R408
9		820 Ohm, 5%, 1/4W Carbon	R409
10		15K Ohm, 5%, 2W M.O. Forming	R410
11		15K Ohm, 5%, 2W M.O. Forming	R411
12		15K Ohm, 5%, 2W M.O. Forming	R412
13		2.7K Ohm, 5%, 1/2W Comp.	R413
14		2.7 Ohm, 5%, 1/2W Comp.	R414
15		2.7K Ohm, 5%, 1/2W Comp.	R415
16		2.2 Ohm, 5%, 2W Metal Oxide	R416
17		2.7K Ohm, 5%, 1/4W Carbon	R419
18		2.7K Ohm, 5%, 1/4W Carbon	R420
19		2.7K Ohm, 5%, 1/4W Carbon	R421
20		500 Ohm, -B Semi-Fixed	VR401
21		500 Ohm, -B Semi-Fixed	VR402
22		5K Ohm, -B Semi-Fixed	VR403
23		5K Ohm, -B Semi-Fixed	VR404
24		5K Ohm, -B Semi-Fixed	VR405

MONITOR 19" VERTICAL - WELLS GARDNER DRAWING NUMBER 200-0091

NECK BOARD

ITEM NO.	PART NO.	DESCRIPTION	REF. DESG.
		CAPACITORS	
1		1200 pF, 500V Ceramic	C401
2		1000 pF, 500V Ceramic	C402
3		1000 pF, 500V Ceramic	C403
4		1500 pF, 1.5 KV Ceramic	C404
5		0.01 uF, 500V Ceramic	C405

MONITOR 19" VERTICAL - WELLS GARDNER DRAWING NUMBER 200-0091

NECK BOARD

ITEM NO.	PART NO.	DESCRIPTION	REF. DESG.
		SEMICONDUCTORS	
1	482-0304	Transistor (NPN) 2SC2068LB	Q401
2	482-0304	Transistor (NPN) 2SC2068LB	Q402
3	482-0304	Transistor (NPN) 2SC2068LB	Q403

MONITOR 19" VERTICAL - WELLS GARDNER DRAWING NUMBER 200-0091

NECK BOARD

ITEM NO.	PART NO.	DESCRIPTION	REF. DESG.
		MISCELLANEOUS	
1		RECEP W Wire 4P-E	J401
2		Plug, PWB 3P-A	P402
3		Plug, Pin 1P-D	P403
4		Plug, PWB 4P-E	P701

P.C. BOARD LAYOUT

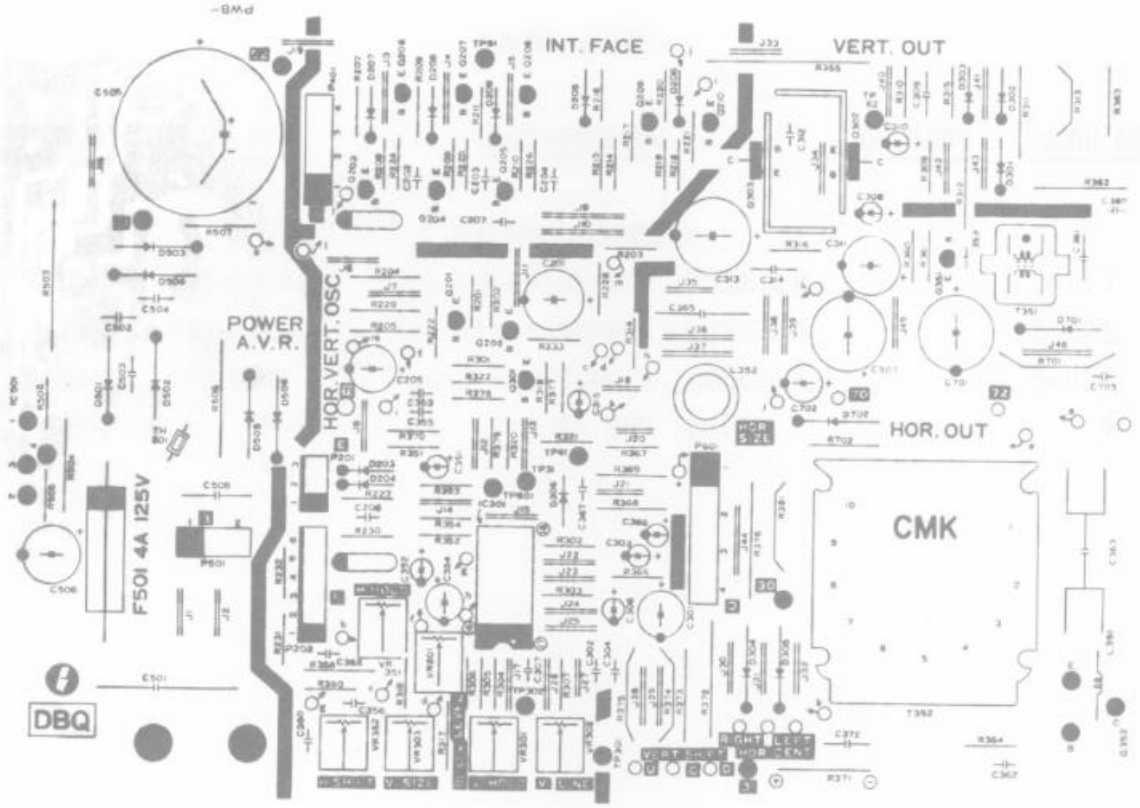

TOP VIEW

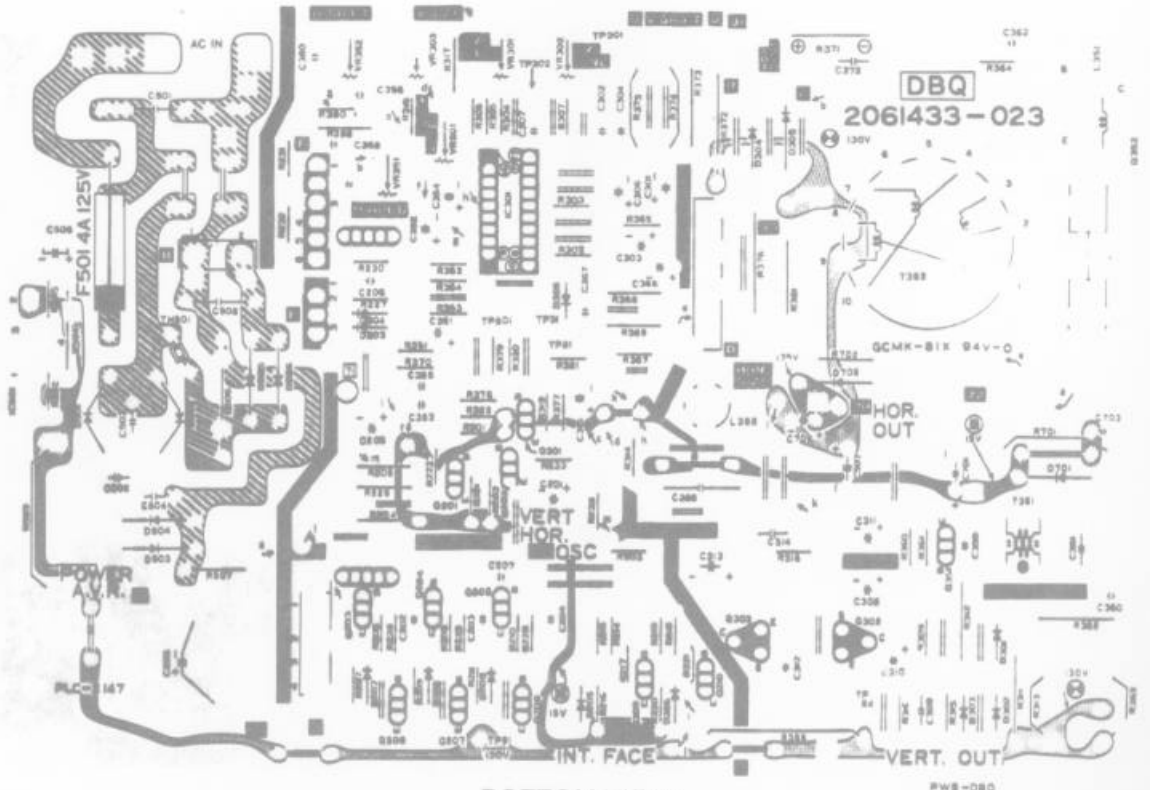

BOTTOM VIEW

P.C. BOARD LAYOUT

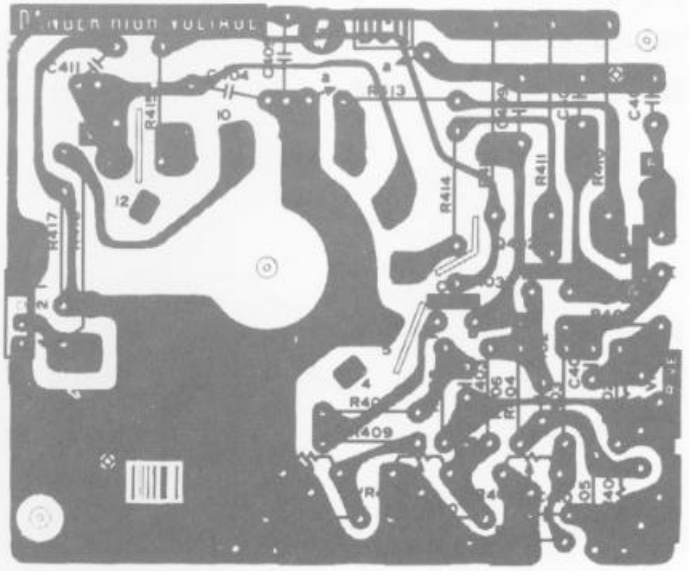

TOP VIEW

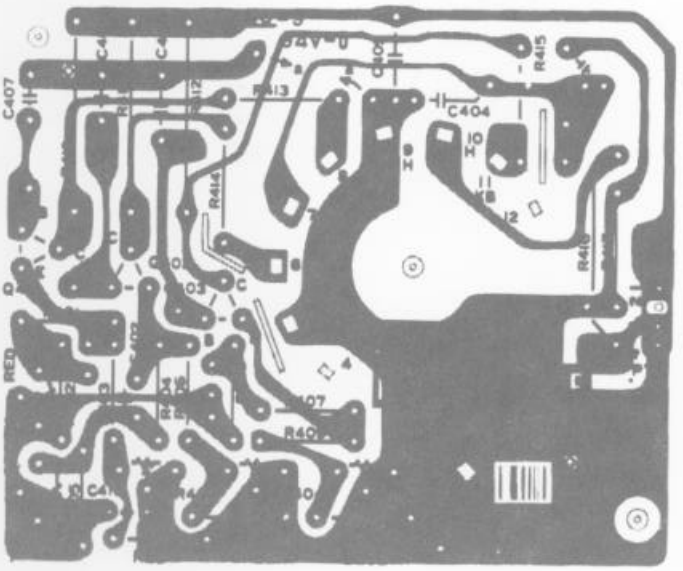

BOTTOM VIEW

IC BOARD ASSEMBLY DRAWING NUMBER 834-5197

ITEM NO.	PART NO.	QTY REQD.	DESCRIPTION
1	280-0257-00	6	Spring Washer, M3
2	280-0273-00	6	Flat Washer, M3
3	280-0435-00	6	Spacer, 6MM
4	280-0436-00	6	Spacer, 15MM
5	280-5013-00	4	Locking Support
6			
7	285-0002-30		Screw, M3-0.5 PN HD PHIL
8			
9			
10	600-5003-00	2	Fem 50P Flat Cable Assy
11	600-5006-00	1	Fem 10P Flat Cable Assy
12	600-5037-00	1	Fem 40P Flat Cable Assy
13			
14	601-0740	6	S-Lock
15			
16			
17	834-5167-00	1	Video Board Assy
18	834-5168-00	1	Sound Board Assy
19	834-5166-00	1	Control Board Assy

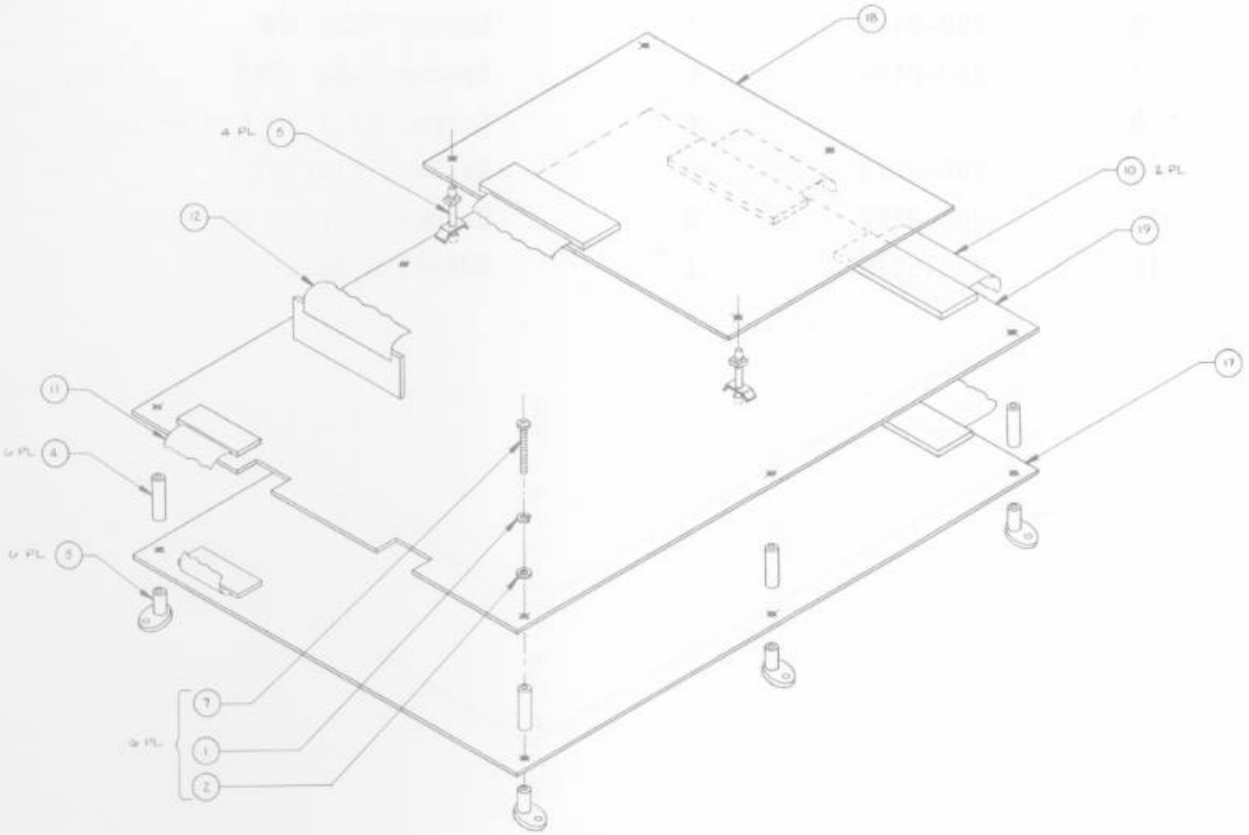

IC BOARD ASSEMBLY

DRAWING NUMBER 834-5198

ITEM NO.	PART NO.	QTY REQD	DESCRIPTION
1	834-5212	1	Control Board II Assembly
2	834-5167	1	Video Board Assembly
3	600-5003	2	50P Flat Cable & Fem. Assembly
4	600-5006	1	10P Cable & Fem Assembly
5	601-0740	6	S-Lock
6	280-0435	6	Spacer Tube 6MM
7	280-0436	6	Spacer Tube 15MM
8		6	Screw, M3 X 30 P.H.PHIL
9	280-0273	6	Washer, Flat M3
10	280-0257	6	Washer, Spring M3
11	421-5278	1	834-5198 Decal

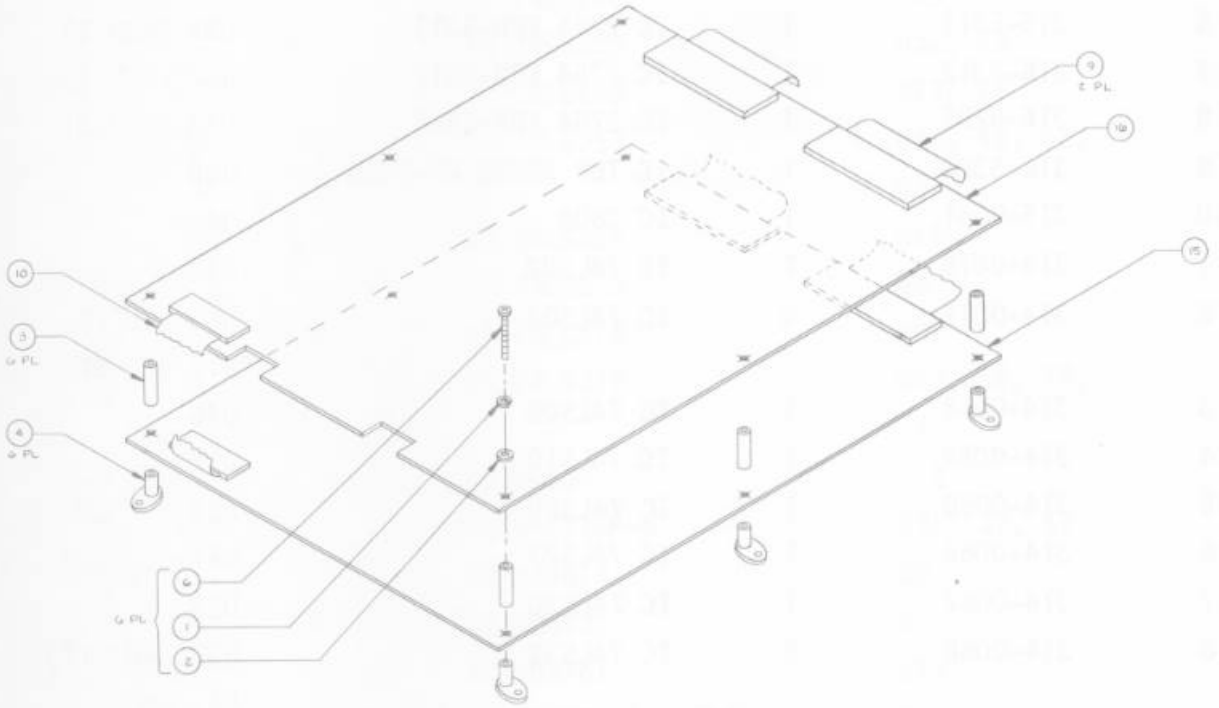

CONTROL BOARD ASSEMBLY

DRAWING NUMBER 834-5166

ITEM NO.	PART NO.	QTY REQ'D	DESCRIPTION	REF NO.
1	171-5205	1	PC Board	
2	530-5004	1	Heat Sink 6.2° C/W	
3	421-5256	1	Sticker 834-5207	
4	316-5309	1	IC 2764 EPR-5309	U35 (ROM 1)
5	316-5310	1	IC 2764 EPR-5310	U34 (ROM 2)
6	316-5311	1	IC 2764 EPR-5311	U33 (ROM 3)
7	316-5312	1	IC 2764 EPR-5312	U32 (ROM 4)
8	316-5295	1	IC 2764 EPR-5295	U76 (ROM 5)
9	316-5308	1	IC TBP 28S42 PR-5308	U68
10	315-0041	1	IC Z80A	U4
11	314-0078	1	IC 74LS02	U42
12	314-0019	6	IC 74LS04	U6, 20, 29, 31, 43, 51
13	314-0058	1	IC 74LS08	U46
14	314-0059	1	IC 74LS10	U17
15	314-0060	1	IC 74LS20	U24
16	314-0066	1	IC 74LS27	U71
17	314-0067	1	IC 74LS30	U25
18	314-0068	5	IC 74LS32	U38, 40, 47, 54, 80
19	314-0062	4	IC 74LS74	U18, 19, 41, 44
20	314-0070	1	IC 74LS86	U50
21	314-0040	1	IC 74LS125	U10
22	314-0056	1	IC 74LS132	U21
23	314-0104	2	IC 74LS138	U55, 56
24	314-0087	1	IC 74LS139	U39
25	314-0076	7	IC 74LS157	U60, 61, 69, 70, 77, 78, 79
26	314-0127	2	IC 74LS164	U22, 23
27	314-0072	2	IC 74LS174	U66, 67

CONTROL BOARD ASSEMBLY DRAWING NUMBER 834-5166

ITEM NO.	PART NO.	QTY REQ'D	DESCRIPTION	REF NO.
28	314-0073	6	IC 74LS175	U14, 15, 16, 27, 28, 30
29	314-0083	1	IC 74LS240	U64
30	314-0055	4	IC 74LS244	U5, 7, 26, 65
31	314-0099	1	IC 74LS245	U45
32	314-0143	2	IC 74LS259	U52, 53
33	314-0122	2	IC 74LS299	U73, 75
34	314-0272	4	IC 74LS353	U48, 49, 62, 63
35	314-0102	1	IC 74LS367	U11
36	314-0131	1	IC 74LS373	U8
37	314-0093	1	IC 74LS374	U81
38	314-0119	4	IC 74LS377	U57, 58, 74, 77
39	313-0022	1	IC NE556	U12
40	315-	3	IC HM6116P-4	U36, 37, 59
41	315-0146	1	IC MB3614	U2
42	313-	1	IC MB3731	U1
43	313-0110	1	IC MB3761	U13
44	315-5019	1	IC Controller Chip G501564	U9
45	213-0008	1	SKT 20 Pin	
46	213-0012	5	SKT 28 Pin	
47	213-0005	2	SKT 40 Pin	
48	213-0001	3	SKT 24 Pin	
49	212-0098	1	Conn M 10 Pin	
50	212-0133	2	Conn M 50 Pin	
51	212-5001	1	Conn M 40 Pin	
52	211-0168	4	Conn Pin Test PT	
53	470-01R0	2	Res 1 Ohm 1/4W 5%	
54	470-0220	2	Res 22 Ohm 1/4W 5%	

CONTROL BOARD ASSEMBLY

DRAWING NUMBER 834-5166

ITEM NO.	PART NO.	QTY REQ'D	DESCRIPTION	REF NO.
55	470-0680	3	Res 68 Ohm 1/4W 5%	
56	470-0101	18	Res 100 Ohm 1/4W 5%	
57	470-0221	7	Res 220 Ohm 1/4W 5%	
58	470-0471	6	Res 470 Ohm 1/4W 5%	
59	470-0102	15	Res 1K Ohm 1/4W 5%	
60	470-0122	2	Res 1.2K Ohm 1/4W 5%	
61	470-0222	1	Res 2.2K Ohm 1/4W 5%	
62	470-0472	11	Res 4.7K Ohm 1/4W 5%	
63	470-0562	1	Res 5.6K Ohm 1/4W 5%	
64	470-0103	11	Res 10K Ohm 1/4W 5%	
65	470-0203	3	Res 20K Ohm 1/4W 5%	
66	470-0473	2	Res 47K Ohm 1/4W 5%	
67	470-0513	1	Res 51K Ohm 1/4W 5%	
68	470-0104	3	Res 100K Ohm 1/4W 5%	
69	470-0124	1	Res 120K Ohm 1/4W 5%	
70	470-0154	1	Res 150K Ohm 1/4W 5%	
71	470-0224	1	Res 220K Ohm 1/4W 5%	
72	470-0334	1	Res 330K Ohm 1/4W 5%	
73	470-0105	2	Res 1M Ohm 1/4W 5%	
74	220-0218	1	Vol Cont 20K Ohm	
75	477-0005	3	Res Pack 8 x 4.7K Ohm 1/8W	
76	477-0006	2	Res Pack 8 x 1K Ohm 1/8W	
77	481-0213	2	Diode IS2075	
78	482-0037	4	XSTR 2SA564	
79	482-0057	2	XSTR 2SC1384	
80	482-0240	5	XSTR 2SC1684	
81	509-0156	1	SW 1 Pos. Dip SPST	
82	510-0049	2	SW 8 Pos. Dip SPST	
83	510-0053	1	SW Push Button	
84	150-0160	1	Cap E470 MF 16 WV	
85	150-0023	8	Cap E10 MF 16 WV	

CONTROL BOARD ASSEMBLY DRAWING NUMBER 834-5166

ITEM NO.	PART NO.	QTY REQ'D	DESCRIPTION	REF NO.
86	150-0059	2	Cap E100 MF 16 WV	
87	150-0159	1	Cap E220 MF 16 WV	
88	150-0031	2	Cap E470 MF 16 WV	
89	150-0168	1	Cap E1000 MF 16 WV	
90	151-0020	2	Cap CER 33 PF 50V	
91	151-0002	3	Cap CER 100 PF 50V	
92	151-0043	7	Cap CER 220 PF 50V	
93	151-0074	2	Cap CER 0.0022 MF 25V	
94	151-0011	4	Cap CER 0.01 MF 50V	
95	151-0041	87*	Cap CER 0.1 MF 25V	
96	152-0063	1	Cap Film 0.0015 MF 50V	
97	152-0026	1	Cap Film 0.0039 MF 100V	
98	152-0031	2	Cap Film 0.1 MF 50V	
99	180-5002	2	Coil ST-501571	
100	601-5022	22	Filter 253D-01	
101	601-5023	4	Filter 2535-01	

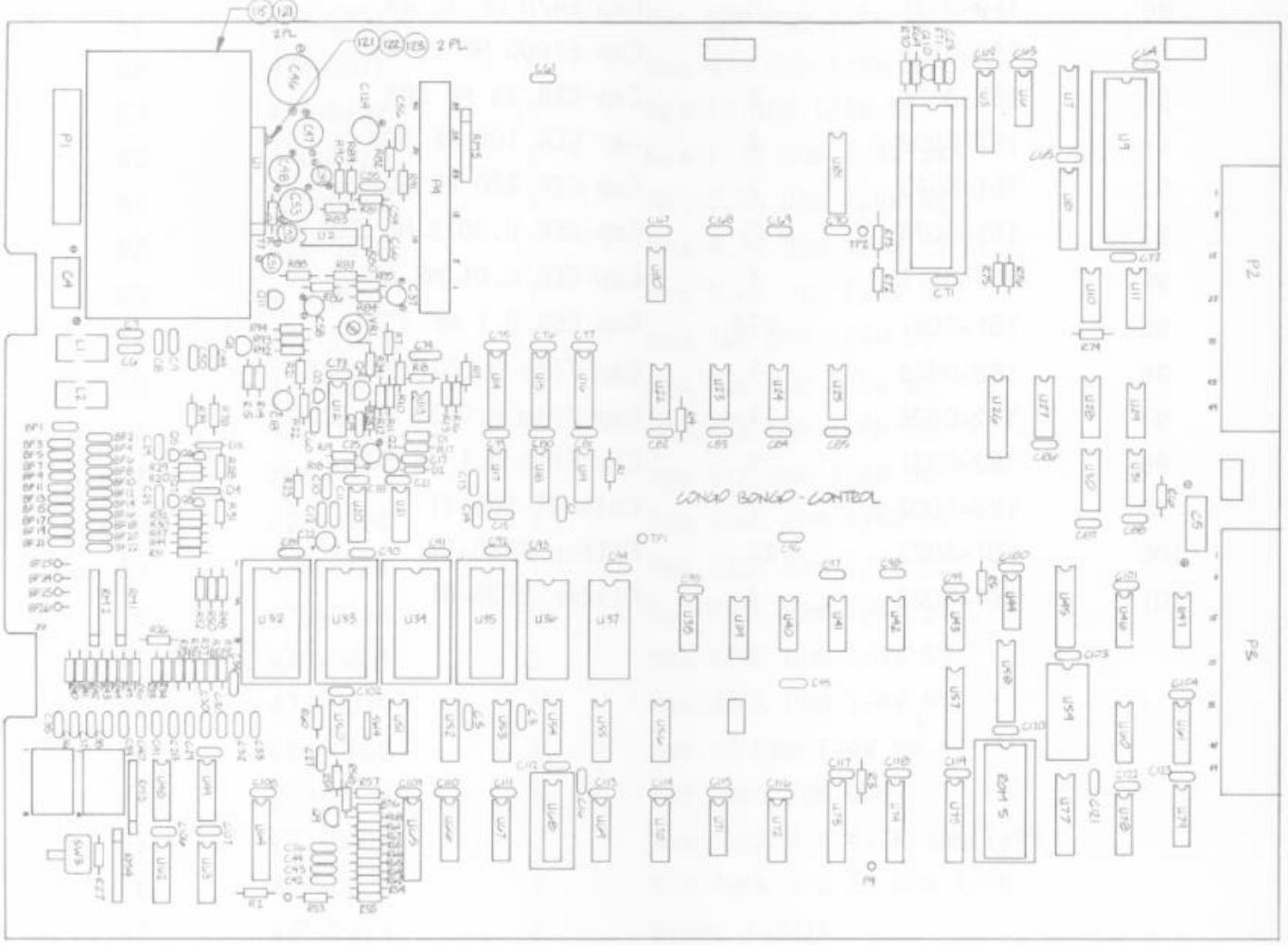
LONGO BONGO - CONTROL

CONTROL BOARD 2 ASSEMBLY DRAWING NUMBER 834-5212

ITEM NO.	PART NO.	QTY REQD.	DESCRIPTION	REF DES.
2	530-5004	1	Heat Sink 6.2°C/W	
3	421-5262	1	Decal 834-5212	
4	316-5334	1	IC 2764 EPR-5334	U21
5	316-5335	1	IC 2764 EPR-5335	U22
6	316-5336	1	IC 2764 EPR-5336	U23
7	316-5337	1	IC 2764 EPR-5337	U24
8	316-5295	1	IC 2764 EPR-5295	U77
9	316-5307	1	IC 2764 EPR-5307	U19
10	316-5315	1	IC TBP28L22 PR-5315	U87
11	315-0041	2	IC Z80A	U18, 29.
12	315-0152	1	IC 8225A-5	U97
13	314-0078	2	IC 74LS02	U45, 68.
14	314-0019	5	IC 74LS04	U33, 47, 53, 83, 95.
15	314-0015	1	IC 7404	U16
16	314-0058	1	IC 74LS08	U93
17	314-0059	1	IC 74LS10	U56
18	314-0146	1	IC 7416	U13
19	314-0060	1	IC 74LS20	U94
20	314-0066	1	IC 74LS27	U69
21	314-0067	1	IC 74LS30	U93
22	314-0068	4	IC 74LS32	U39, 42, 43, 90.
23	314-0062	4	IC 74LS74	U46, 48, 71, 92.
24	314-0070	1	IC 74LS86	U84
25	314-0040	1	IC 74LS125	U31
26	314-0056	1	IC 74LS132	U81
27	314-0104	3	IC 74LS138	U17, 34, 44.
28	314-0087	1	IC 74LS139	U38
29	314-0076	7	IC 74LS157	U62, 63, 64, 66, 88, 89, 96.
30	314-0127	2	IC 74LS164	U91, 92.
31	314-0072	2	IC 74LS174	U85, 86.
32	314-0073	6	IC 74LS175	U35, 36, 40, 54, 55, 70.
33	314-0083	1	IC 74LS240	U57

CONTROL BOARD 2 ASSEMBLY DRAWING NUMBER 834-5212

ITEM NO.	PART NO.	QTY REQD.	DESCRIPTION	REF DES.
34	314-0055	4	IC 74LS244	U27, 28, 37, 82.
35	314-0099	1	IC 74LS245	U60
36	314-0143	2	IC 74LS259	U58, 59
37	314-0122	2	IC 74LS299	U78, 80
38	314-0272	4	IC 74LS353	U51, 52, 66, 67
39	314-0102	1	IC 74LS367	U41
40	314-0131	1	IC 74LS373	U32
41	314-0093	1	IC 74LS374	U98
42	314-0119	4	IC 74LS377	U74, 75, 76, 79
43	314-0075	2	IC 74LS393	U14, 15
44	313-0022	1	IC NE556	U49
45	313-0139	1	IC MB3731	U50
46	313-0110	1	IC MB3761	U50
47	313-0140	1	IC AN78N06	U3
48	315-0217	4	IC HM6116P-4	U20, 25, 26, 61
49	315-0146	4	IC MB3614MG	U2, 5, 6, 7
50	315-0034	1	IC CD4001	U11
51	315-0205	2	IC 76489A	U8, 9
52	315-0221	1	IC MC14538B	U12
53	315-0035	1	IC MM5837	U10
54	315-5019	1	IC Cont. Chip G501564	U30
55	315-5021	1	IC Cont. Chip ST-501534	U4
56	213-0008	1	Socket 20-pin	
57	213-0012	6	Socket 28-pin	
58	213-0005	1	Socket 40-pin	
59	212-0098	1	Conn. Male 10-pin	
60	212-0133	2	Conn. Male 50-pin	
61	211-0168	4	Conn. Pin Test Point	
62	470-01R0	2	Resistor, 1 ohm ¼W 5%	
63	470-0100	2	Resistor, 10 ohm ¼W 5%	
64	470-0220	3	Resistor, 22 ohm ¼W 5%	
65	470-0680	3	Resistor, 68 ohm ¼W 5%	
66	470-0221	9	Resistor, 220 ohm ¼W 5%	
67	470-0331	1	Resistor, 330 ohm ¼W 5%	
68	470-0471	7	Resistor, 470 ohm ¼W 5%	

CONTROL BOARD 2 ASSEMBLY DRAWING NUMBER 834-5212

ITEM NO.	PART NO.	QTY REQD.	DESCRIPTION
69	470-0102	19	Resistor, 1K ohm ¼W 5%
70	470-0122	5	Resistor, 1.2K ¼W 5%
71	470-0202	2	Resistor, 2K ¼W 5%
72	470-0222	1	Resistor, 2.2K ¼W 5%
73	470-0332	1	Resistor, 3.3K ¼W 5%
74	470-0472	11	Resistor, 4.7K ¼W 5%
75	470-0562	1	Resistor, 5.6K ¼W 5%
76	470-0103	16	Resistor, 10K ¼W 5%
77	470-0153	2	Resistor, 15K ¼W 5%
78	470-0203	11	Resistor, 20K ¼W 5%
79	470-0223	10	Resistor, 22K ¼W 5%
80	470-0473	12	Resistor, 47K ¼W 5%
81	470-0513	9	Resistor, 51K ¼W 5%
82	470-0104	8	Resistor, 100K ¼W 5%
83	470-0124	1	Resistor, 120K ¼W 5%
84	470-0154	2	Resistor, 150K ¼W 5%
85	470-0204	1	Resistor, 200K ¼W 5%
86	470-0224	1	Resistor, 220K ¼W 5%
87	470-0244	1	Resistor, 240K ¼W 5%
88	470-0334	2	Resistor, 330K ¼W 5%
89	470-0394	2	Resistor, 390K ¼W 5%
90	470-0474	2	Resistor, 470K ¼W 5%
91	470-0105	4	Resistor, 1M ¼W 5%
92	470-0225	2	Resistor, 2.2M ¼W 5%
93	150-0233	2	Capacitor, E. 1mf 50V NP
94	150-0009	9	Capacitor, E. 1mf 50V U-type
95	150-0023	6	Capacitor, E. 10mf 16V U-type
96	150-0065	10	Capacitor, E. 47mf 16V U-type
97	150-0059	2	Capacitor, E. 100mf 16V U-type
98	150-0159	1	Capacitor, E. 220mf 16V U-type
99	150-0160	1	Capacitor, E. 1470mf 16V U-type
100	150-0168	1	Capacitor, E. 1000mf 16V
101	151-0020	3	Capacitor, Cer. 33pf 50V
102	151-0002	3	Capacitor, Cer. 100pf 50V
103	151-0043	10	Capacitor, Cer. 220pf 50V
104	151-0042	1	Capacitor, Cer. 470pf 50V

CONTROL BOARD 2 ASSEMBLY DRAWING NUMBER 834-5212

ITEM NO.	PART NO.	QTY REQD.	DESCRIPTION
105	151-0005	1	Capacitor, Cer. 680pf 50V
106	151-0074	3	Capacitor, Cer. 0.0022mf 25V
107	151-0011	94	Capacitor, Cer. 0.01mf 50V
108	151-0056	21	Capacitor, Cer. 0.047mf 50V
109	151-0041	2	Capacitor, Cer. 0.1mf 25V
110	152-0063	1	Capacitor, Film, 0.0015mf 50V
111	152-0051	1	Capacitor, Film, 0.0033mf 50V
112	152-0026	1	Capacitor, Film, 0.0039mf 100V
113	152-0036	2	Capacitor, Film, 0.0068mf 50V
114	152-0033	1	Capacitor, Film, 0.01mf 50V
115	152-0079	2	Capacitor, Film. 0.022mf 50V
116	152-0035	6	Capacitor, Film, 0.033mf 50V
117	152-0038	2	Capacitor, Film, 0.047mf 50V
118	152-0066	3	Capacitor, Film, 0.068mf 25V
119	152-0031	6	Capacitor, Film, 0.1mf 50V
120	153-0070	4	Capacitor, Tant. 1mf 16V
121	153-0058	1	Capacitor, Tant. 2.2mf 16V
122	153-0050	1	Capacitor, Tant. 33mf 16V
123	150-0031	2	Capacitor, E. 470mf 16V T-type
124	220-0218	1	Volume Control, 20K
125	477-0005	3	Resistor Pack, 8 X 4.7K 1/8W w/c
126	477-0039	2	Resistor Pack, 8 X 1K 1/8W w/c
127	477-0047	5	Resistor Pack, 4 X 100 ohm ¼W
128	481-0213	12	Diode, IS2075
129	482-0037	5	Transistor 2SA564Q
130	482-0057	2	Transistor 2SC1384R
131	482-0240	3	Transistor 2SC1684
132	509-0156	1	DIP Switch 1 Position
133	510-0049	2	DIP Switch 8 Position
134	510-0053	1	Push Button Switch
135	180-5002	2	Coil ST-501571
136	270-5001	23	Filter 253D-01
137	270-5002	4	Filter 2535-01
138		2	Screw, M3 X 10 R.H.PHIL w/F.& S.Washer
139		2	Screw, M3 X 6 P.H.PHIL w/F.Washer

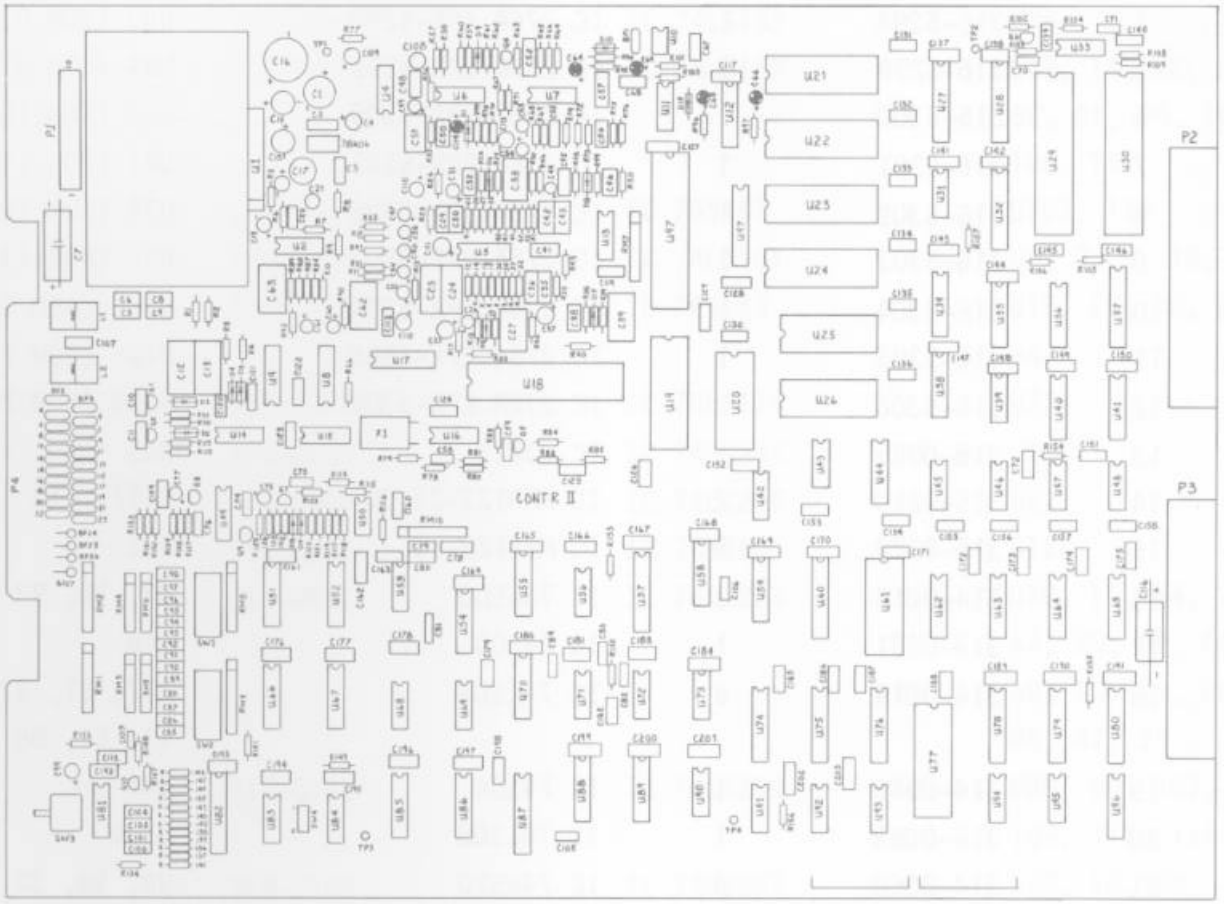
P2
P3
U18
CONTR II

VIDEO BOARD ASSEMBLY DRAWING NUMBER 834-5167

ITEM NO.	PART NO.	QTY REQ'D	DESCRIPTION	REF NO.
1	171-5026	1	PC Board	
2	316-5296	1	IC 2764 EPR-5296	U57 (ROM 6)
3	316-5297	1	IC 2764 EPR-5297	U58 (ROM 7)
4	316-5298	1	IC 2764 EPR-5298	U93 (ROM 8)
5	316-5299	1	IC 2764 EPR-5299	U94 (ROM 9)
6	316-5300	1	IC 2764 EPR-5300	U95 (ROM 10)
7	316-5301	1	IC 2764 EPR-5301	U77 (ROM 11)
8	316-5302	1	IC 2764 EPR-5302	U78 (ROM 12)
9	316-5303	1	IC 2764 EPR-5303	U79 (ROM 13)
10	316-5304	1	IC 2764 EPR-5304	U104 (ROM 14)
11	316-5305	1	IC 2764 EPR-5305	U105 (ROM 15)
12	316-5306	1	IC 2764 EPR-5306	U106 (ROM 16)
13	315-0065	1	IC 93419	U53
14	315-0219	2	IC AM9122-25 DC	U117, 118
15	315-0220	1	IC MB8128-10	U12
16	314-0018	3	IC 74LS00	U8, 16, 92
17	314-0281	1	IC 74S00	U48
18	314-0019	6	IC 74LS04	U17, 31, 37, 43, 54, 88
19	314-0046	1	IC 74S04	U45
20	314-0058	1	IC 74LS08	U100
21	314-0060	4	IC 74LS20	U9, 19, 32, 62
22	314-0066	1	IC 74LS27	U61
23	314-0067	1	IC 74LS30	U35
24	314-0068	2	IC 74LS32	U28, 56
25	314-0273	1	IC 74S32	U97
26	314-0140	1	IC 74S74	U115
27	314-0062	4	IC 74LS74	U1, 7, 20, 52
28	314-0070	6	IC 74LS86	U4, 5, 38, 55, 64, 65
29	314-0274	2	IC 74S86	U98, 116

VIDEO BOARD ASSEMBLY

DRAWING NUMBER 834-5167

ITEM NO.	PART NO.	QTY REQ'D	DESCRIPTION	REF NO.
30	314-0237	1	IC 74LS109	U63
31	314-0151	2	IC 74S112	U46, 47
32	314-0104	1	IC 74LS138	U34
33	314-0087	1	IC 74LS139	U39
34	314-0076	10	IC 74LS157	U13, 14, 22, 36, 82, 91, 96, 103, 108, 121
35	314-0269	2	IC 74S157	U102, 119
36	314-0097	5	IC 74LS161	U2, 3, 6, 18, 21
37	314-0139	5	IC 74S163	U15, 29, 30, 83, 84
38	314-0072	1	IC 74LS174	U72
39	314-0055	1	IC 74LS244	U33
40	314-0099	1	IC 74LS245	U27
41	314-0276	1	IC 74S260	U120
42	314-0101	15	IC 74LS283	U10, 11, 24, 25, 44, 59, 60, 68, 69, 70, 71, 85, 86, 87, 99
43	314-0122	6	IC 74LS299	U80, 90, 107, 109, 112, 114
44	314-0102	3	IC 74LS367	U75, 76, 89
45	314-0103	1	IC 74LS368	U50
46	314-0275	4	IC 74LS373	U41, 110, 111, 113
47	314-0275	1	IC 74S373	U101
48	314-0093	8	IC 74LS374	U23, 26, 42, 51, 66, 67, 74, 81
49	314-0119	3	IC 74LS377	U40, 49, 73
50	315-5020	1	IC Controller Chip G501533	U122

VIDEO BOARD ASSEMBLY DRAWING NUMBER 834-5167

ITEM NO.	PART NO.	QTY REQ'D	DESCRIPTION	REF NO.
51				
52	213-0011	2	SKT 22 Pin	
53	213-0012	11	SKT 28 Pin	
54	212-0098	1	Conn M 10 Pin	
55	212-0133	2	Conn M 50 Pin	
56	211-0168	4	Conn Pin Test PT	
57	470-0102	19	Res 1K Ohm 1/4W 5%	
58	477-0039	1	Res Pack 8 x 1K Ohm 1/8W W/C	
59	150-0031	2	Cap E 470 MF 16V	
60	151-0043	1	Cap CER 220 PF 50V	
61	151-0074	1	Cap CER 0.0022 MF 25V	
62	151-0041	56*	Cap CER 0.1 MF 25V	
63	180-5002	1	Coil ST-501571	
64	601-5022	21	Filter 253D-01	
65	601-5023	3	Filter 253S-01	

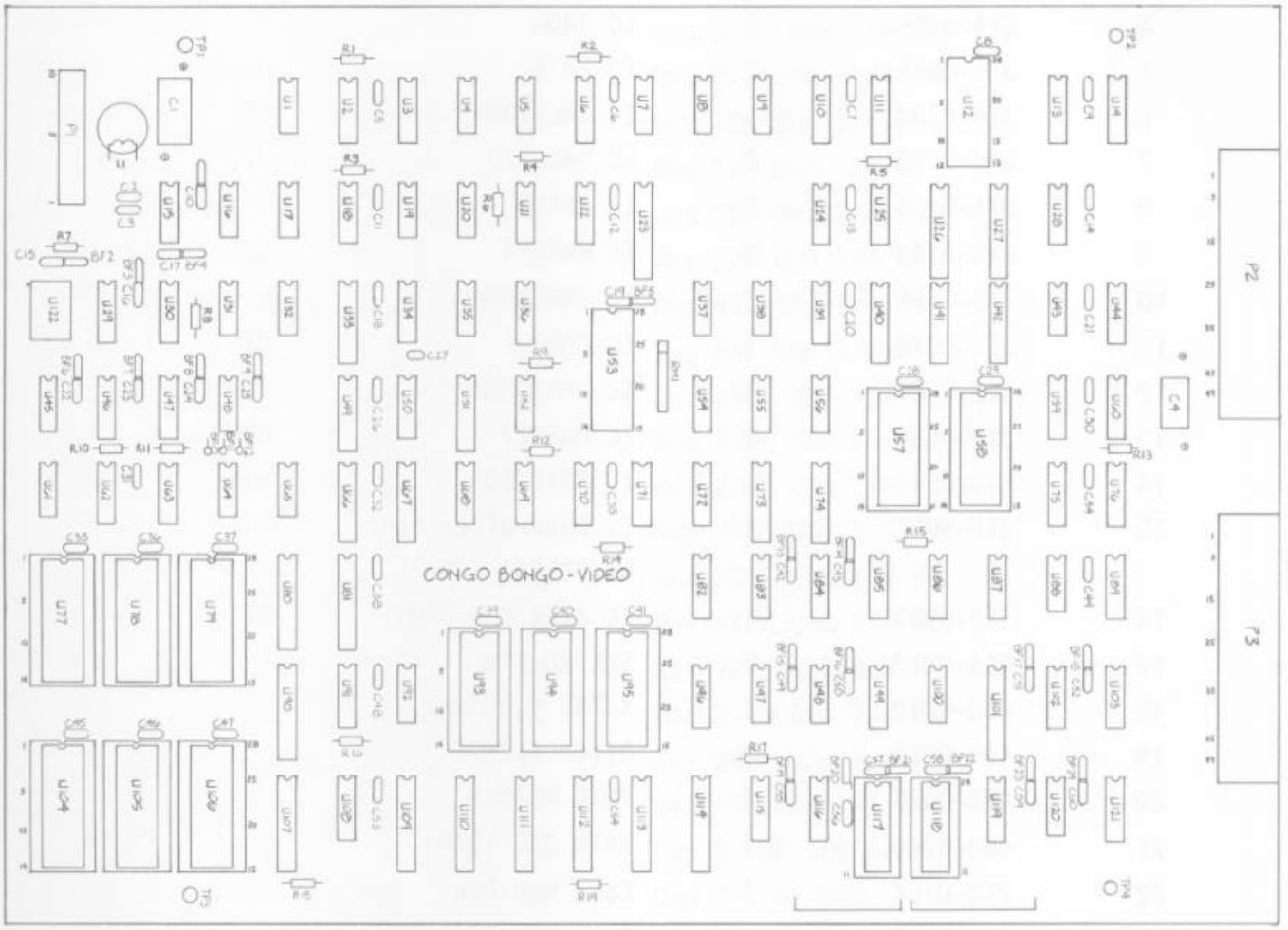
CONGO BONGO - VIDEO
P2
P3

SOUND BOARD ASSEMBLY

DRAWING NUMBER 834-5168

ITEM NO.	PART NO.	QTY REQ'D	DESCRIPTION	REF NO.
1	171-5027	1	PC Board	
2	315-0041	1	IC Z80A	U3
3	315-0152	1	IC 8255A-5	U1
4	314-0015	1	IC 7404	U2
5	314-0146	1	IC 7416	U6
6	314-0104	1	IC 74LS138	U9
7	314-0075	2	IC 74LS393	U7, 8
8	315-0205	2	IC 76489	U4, 5
9	315-0146	4	IC MB3614	U12, 13, 16,17
10	315-0217	1	IC HM6116P-4	U10
11	315-0034	1	IC CD4001	U18
12	315-0228	1	IC μPD4538 BC	U19
13	315-0035	1	IC MM5837	U20
14	313-0140	1	IC AN78N06	U14
15	315-5021	1	IC Controller Chip ST-501534	U15
16	316-5307	1	IC 2764 EPR-5307	U11
17	213-0012	1	Skt 28 Pin	
18	230-0039	1	X-TAL 4.00 MHz	
19	481-0213	8	Diode IS2075	
20	482-0037	1	XSTR 2SA564	
21	482-0240	1	XSTR 2SC 1684	
22	212-0164	1	Conn M40 Pin	
23	211-0168	3	Conn Pin Test PT	
24	477-0005	2	Res Pack 8 x 4.7K Ohm 1/8W	
25	470-0100	2	Res 10 Ohm 1/4 5%	
26	470-0220	1	Res 22 Ohm 1/4 5%	
27	470-0221	2	Res 220 Ohm 1/4 5%	
28	470-0331	1	Res 330 Ohm 1/4 5%	
29	470-0102	7	Res 1K Ohm 1/4 5%	

SOUND BOARD ASSEMBLY DRAWING NUMBER 834-5168

ITEM NO.	PART NO.	QTY REQ'D	DESCRIPTION	REF NO.
30	470-0122	3	Res 1.2K Ohm 1/4 5%	
31	470-0202	2	Res 2K Ohm 1/4 5%	
32	470-0222	1	Res 2.2K Ohm 1/4 5%	
33	470-0332	1	Res 3.3K Ohm 1/4 5%	
34	470-0472	1	Res 4.7K Ohm 1/4 5%	
35	470-0103	13	Res 10K Ohm 1/4 5%	
36	470-0153	2	Res 15K Ohm 1/4 5%	
37	470-0203	8	Res 20K Ohm 1/4 5%	
38	470-0223	10	Res 22K Ohm 1/4 5%	
39	470-0473	12	Res 47K Ohm 1/4 5%	
40	470-0513	8	Res 51K Ohm 1/4 5%	
41	470-0104	5	Res 100K Ohm 1/4 5%	
42	470-0154	1	Res 150K Ohm 1/4 5%	
43	470-0204	1	Res 200K Ohm 1/4 5%	
44	470-0334	1	Res 330K Ohm 1/4 5%	
45	470-0394	2	Res 390K Ohm 1/4 5%	
46	470-0474	2	Res 470K Ohm 1/4 5%	
47	470-0105	3	Res 1M Ohm 1/4 5%	
48	470-0225	2	Res 2.2M Ohm 1/4 5%	
49	470-0244	1	Res 240K Ohm 1/4 5%	
50	470-0471	1	Res 470 Ohm 1/4 5%	
51	150-	2	Cap E IMF 50V NP	
52	150-0009	8	Cap E 1 MF 50V	
53	150-0023	2	Cap E 10 MF 16V	
54	150-0065	10	Cap E 47 MF 16V	
55	150-0159	2	Cap E 220 MF 16V	
56	150-0160	1	Cap E 470 MF 16V	
57	151-0020	1	Cap CER 33 PF 50V	
58	151-0043	1	Cap CER 220 PF 50V	
59	151-0042	1	Cap CER 470 PF 50V	
60	151-0005	1	Cap CER 680 PF 50V	

SOUND BOARD ASSEMBLY DRAWING NUMBER 834-5168

ITEM NO.	PART NO.	QTY REQ'D	DESCRIPTION	REF NO.
61	151-0074	2	Cap CER 0.0022 MF 25V	
62	151-0011	1	Cap CER 0.1 MF 50V	
63	151-0041	20*	Cap CER 0.1 MF 25V	
64	152-0063	1	Cap Film 0.0015 MF 50V	
65	152-0051	1	Cap Film 0.0033 MF 50V	
66	152-0026	1	Cap Film 0.0039 MF 100V	
67	152-0036	2	Cap Film 0.0068 MF 50V	
68	152-0033	1	Cap Film 0.01 MF 50V	
69	152-0079	2	Cap Film 0.022 MF 50V	
70	152-0035	6	Cap Film 0.033 MF 50V	
71	152-0038	2	Cap Film 0.047 MF 50V	
72	152-0066	3	Cap Film 0.068 MF 25V	
73	152-0031	4	Cap Film 0.1 MF 50V	
74	153-0070	4	Cap Tant 1 MF 16V	
75	153-0058	1	Cap Tant 2.2 MF 10V	
76	153-0050	1	Cap Tant 33 MF 16V	
77	601-5022	3	Filter 253D-01	

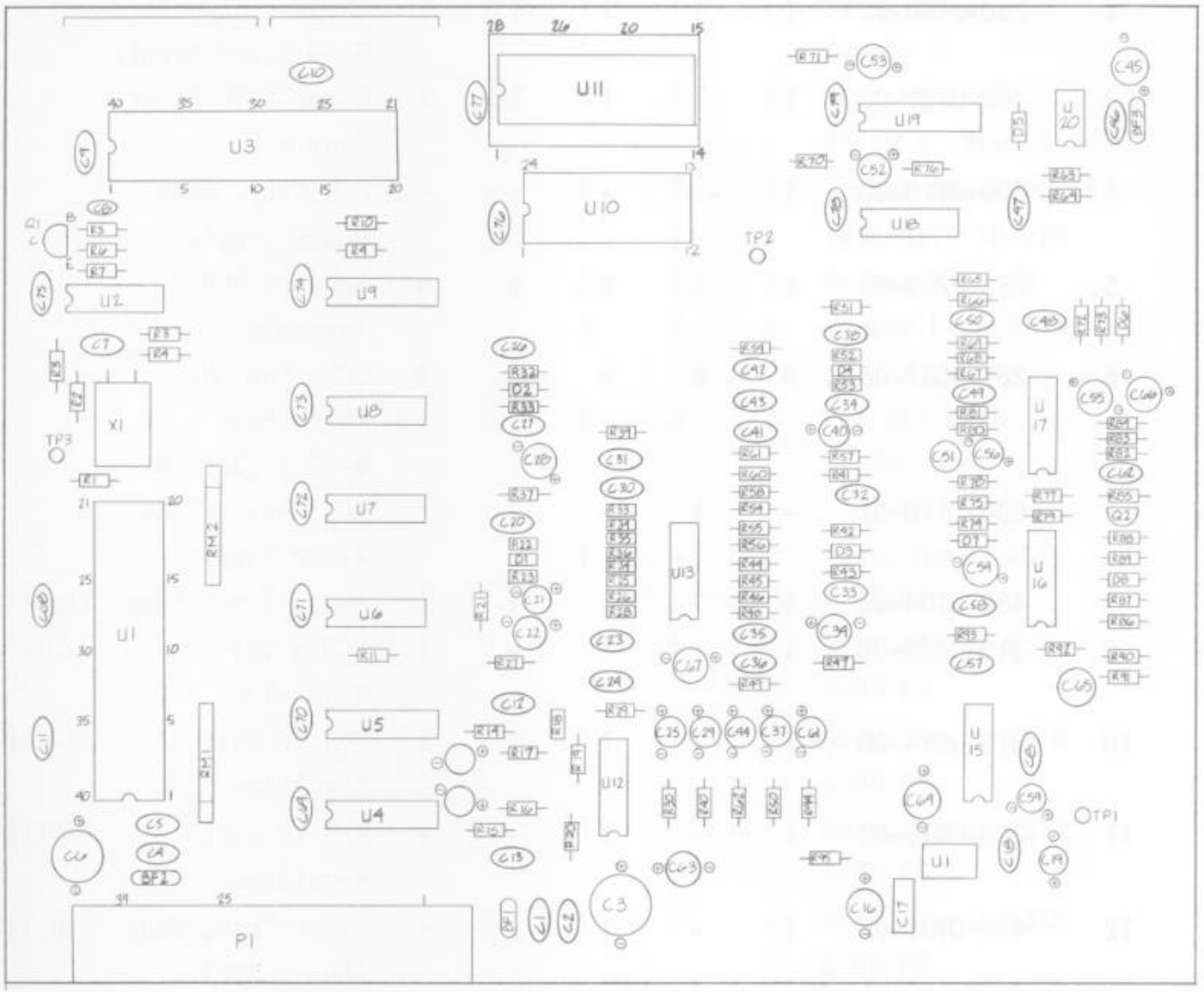
U11
U3
U10
U19
U18
U9
U8
U7
U6
U5
U4
U2
U1
U13
U12
U17
U16
U15
P1
TP1
TP2
TP3
X1

G-80 POWER SUPPLY ASSEMBLY

DRAWING NUMBER 800-0191

ITEM NO.	PART NO.	QTY. REQD.					DESCRIPTION	REF DES.
		-00	-01	-02	-03	-04		
1	530-0016-00	1	1	1	1	1	Heat Sink G-80 Power Supply	
2	250-0460-00	1	1	1	1	1	Chassis Support G-80 Power Supply	
3	250-0461-00	1	1	1	1	1	Cover G-80 Power Supply	
4	800-0170-00	1	-	-	-	-	PCB Assy. G-80 Power Supply	
5	253-0206-00	6	6	6	6	6	Support PCB Threaded	
6	281-0032-06	8	8	8	8	8	SCR. PNH PHIL Third FRMG 6-32 x .375 LG.	
7	800-0170-01	-	1	-	-	-	PCB, Assy. G-80 Power Supply	
8	482-0104-00	1	1	1	1	1	Power Transistor	Tip 141
9	313-0023-00	1	-	1	-	1	NEG 5 Volt Regulator	320T5
10	313-0014-00	1	1	1	1	1	POS 12 Volt Regulator	340T12
11	313-0015-00	1	-	1	-	-	NEG 12 Volt Regulator	320T12
12	482-0100-00	1	-	1	-	-	Power Transistor (Audio AMP)	Tip 125
13	482-0019-00	1	-	1	-	-	Power Transistor (Audio AMP)	Tip 120
14	800-0170-02	-	-	1	-	-	PCB Assy. G-80 Power Supply	
15	800-0170-03	-	-	-	1	-	PCB Assy. G-80 Power Supply	
16	420-0557-00	1	1	1	1	1	Decal, Fuse	

G-80 POWER SUPPLY ASSEMBLY DRAWING NUMBER 800-0191

ITEM NO.	PART NO.	QTY. REQD. -00	-01	-02	-03	-04	DESCRIPTION	REF DES.
17	280-0117-00	1	-	-	-	-	Tab Rivet, Male 1/4"	
18	420-0575-00	1	1	1	1	1	Decal-Power Supply B	
19	281-0001-08	6	2	6	2	3	SCR, PNH PHIL #4-40 x .500 LG	
20	280-0341-00	6	2	6	2	3	Washer Shoulder #4	
21	310-0006-01	5	1	5	1	1	INSL XSTR TO-220	
22	283-0060-13	6	2	6	2	3	Washer Flat #4	
23	283-0061-02	6	2	6	2	3	Washer Lock Split #4	
24	283-0072-07	6	2	6	2	3	Nut HEX Mach #4-40	
25								
26	800-0244-00	1	-	1	-	1	Assy. Harn. XSTR G-80 P2	
27	800-0245-00	1	1	1	1	1	Assy. Harn. XSTR G-80 P3	
28	800-0246-00	1	-	1	-	-	Assy. Harn. XSTR G-80 P4	
29	800-0247-00	1	-	1	-	-	Assy. Harn. XSTR G-80 P5	
30	800-0248-00	1	-	1	-	-	Assy. Harn. XSTR G-80 P6	
31	310-0007-01	1	1	1	1	1	Insl. XSTR "H" (TO-218)	
32	600-0092-42	.38'	.38'	.38'	.38'	.38'	Wire 22 AWG Red	
33	600-0092-45	.38'	.38'	.38'	.38'	.38'	Wire 22 AWG Green	
34	600-0092-44	.38'	.38'	.38'	.38'	.38'	Wire 22 AWG White	
35	310-0041-02	.25'	.25'	.25'	.25'	.25'	Shrink Tubing, .125 I.D. CLR	
36	280-0005-00	1	1	1	1	1	Cable Tie Standard	

G-80 POWER SUPPLY ASSEMBLY DRAWING NUMBER 800-0191

ITEM NO.	PART NO.	QTY. REQD.					DESCRIPTION	REF DES.
		-00	-01	-02	-03	-04		
37	800-0170-04	-	-	-	-	1	PC Assy. G-80 Power Supply	
38								
39								
40								
41								
42								
43								
44								
45								
46								
47								
48								
49								
50								

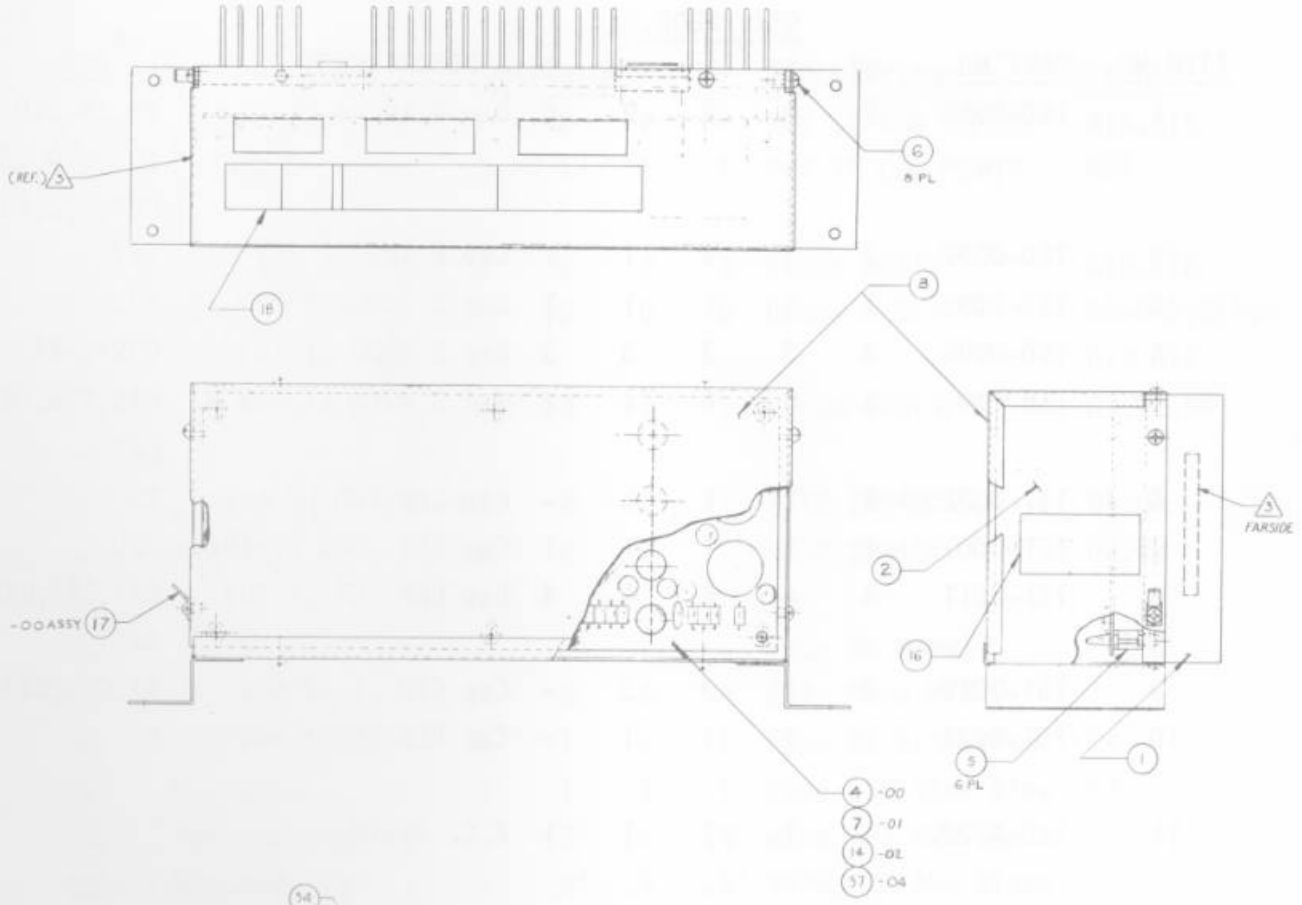
(REF.) 3
6
6 PL
18
8
FARSIDE
-00 ASSY 17
2
16
5
6 PL
1
4 -00
7 -01
14 -02
37 -04

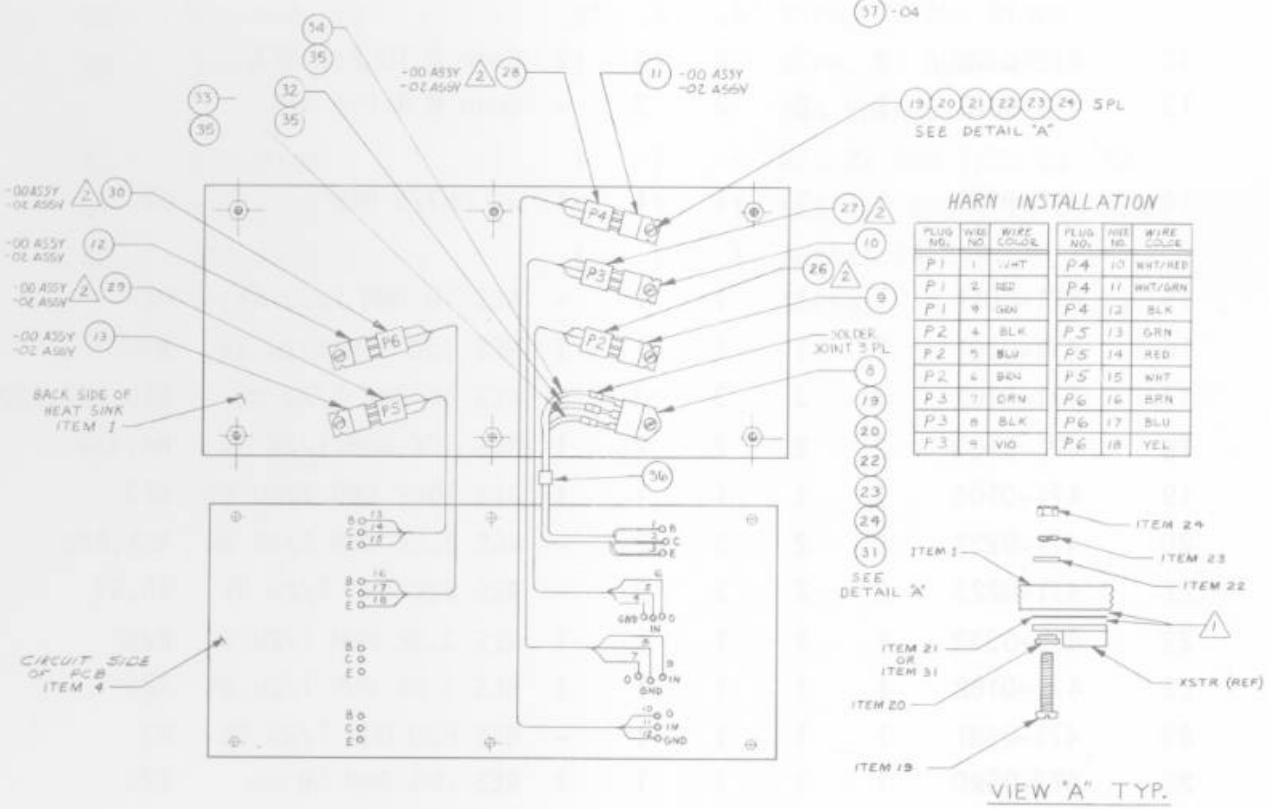
34
35
33
35
32
35
-00 ASSY -02 ASSY 2 28
11 -00 ASSY -02 ASSY
19 20 21 22 23 24 5PL
SEE DETAIL "A"
-00 ASSY -02 ASSY 2 30
-00 ASSY -02 ASSY 12
-00 ASSY -02 ASSY 2 29
-00 ASSY -02 ASSY 13
BACK SIDE OF HEAT SINK ITEM 1
P6
P5
P4
P3
P2
27 2
10
26 2
9
SOLDER JOINT 3 PL
8
19
20
22
23
24
31
SEE DETAIL "A"
36
CIRCUIT SIDE OF PCB ITEM 4
GND IN
IN GND
IN GND
HARN INSTALLATION
PLUG NO. | WIRE NO | WIRE COLOR
P1 1 WHT
P1 2 RED
P1 9 GRN
P2 4 BLK
P2 5 BLU
P2 6 BRN
P3 7 GRN
P3 8 BLK
P3 9 VIO
PLUG NO. | WIRE NO. | WIRE COLOR
P4 10 WHT/RED
P4 11 WHT/GRN
P4 12 BLK
P5 13 GRN
P5 14 RED
P5 15 WHT
P6 16 BRN
P6 17 BLU
P6 18 YEL
ITEM 24
ITEM 23
ITEM 22
ITEM 1
1
ITEM 21 OR ITEM 31
XSTR (REF)
ITEM 20
ITEM 19
VIEW "A" TYP.

G-80 POWER SUPPLY P.C. ASSEMBLY DRAWING NUMBER 800-0170

ITEM NO.	PART NO.	QTY. REQD. -0C	-01	-02	-03	-04	DESCRIPTION	REF DES.
1	150-0088	9	9	9	9	6	Cap E 10 μf 25V	C5,C8,C10, C18,C19,C23, C24,C26,C31
2	150-0092	1	1	1	1	1	Cap E 100 μf 25V	C17
3	150-0095	1	1	1	1	1	Cap E 3300 μf 25V	C30
4	150-0096	3	3	3	3	3	Cap E 6800 μf 16V	C32-C-34
5	150-0097	4	4	4	4	2	Cap E 4700 μf 25V	C15,C16,C27, C28
6	151-0002	1	1	1	1	-	Cap CER 100 μf 50V	C9
7	151-0007	1	1	1	1	1	Cap CER .005 μf 100V	C20
8	151-0011	4	4	4	4	4	Cap CER .01 μf 50V	C21,C22,C25, C29
9	151-0012	3	3	3	3	-	Cap CER .1 μf 50V	C2,C13,C14
10	151-0021	1	1	1	1	-	Cap CER 20 pf 50V	C7
11	170-0222	1	1	1	1	1	P.C. Board	
12	212-0020	2	2	2	2	2	Conn M 10 Pin RTA	
13	212-0081	2	2	2	2	-	Conn M 4 Pin RTA	
14	313-0001	1	1	1	1	1	IC LM723 Dip	U1
15	471-0011	1	1	1	1	-	RES 10 OHM 1/2W 5%	R2
16	471-0101	1	1	1	1	1	RES 100 OHM 1/2W 5%	R32
17	471-0102	3	3	3	3	2	RES 1K OHM 1/2W 5%	R10,R27,R29
18	471-0103	2	2	2	2	1	RES 10K OHM 1/2W 5%	R6,R30
19	471-0104	1	1	1	1	1	RES 100K OHM 1/2W 5%	R23
20	471-0222	2	2	2	2	-	RES 2.2K OHM 1/2W 5%	R21,R22
21	471-0223	2	2	2	2	-	RES 22K OHM 1/2W 5%	R5,R9
22	471-0332	1	1	1	1	1	RES 3.3K OHM 1/2W 5%	R28
23	471-0182	1	1	1	1	1	RES 1.8K OHM 1/2W 5%	R26
24	471-0681	1	1	1	1	-	RES 680 OHM 1/2W 5%	R7
25	473-05R0	1	1	1	1	1	RES .05 OHM 5W 3%	R25

G-80 POWER SUPPLY P.C. ASSEMBLY

DRAWING NUMBER 800-0170

ITEM NO.	PART NO.	QTY. REQD.					DESCRIPTION	REF DES.
26	473-00R2	2	2	2	2	-	RES .2 OHM 3W 5%	R14,R15
27	475-0004	1	1	1	1	1	POT 1K Car PCMTV	R31
28	481-0002	2	2	2	2	2	Diode MR751	D10,D12
29	481-0004	10	10	10	10	6	Diode MR501	D6-D-9,D11, D13-D17
30	481-0006	3	3	3	3	1	Diode IN914/IN4148	D1,D4,D5
31	482-0006	2	2	2	2	1	XSTR 2N4403	Q1,Q7
32	482-0014	2	2	2	2	-	XSTR 2N4401	Q2,Q3
33	514-0002	2	-	2	-	-	Fuse 3A Norm.	F1,F2
34	514-0003	8	8	8	8	4	Clip Fuse MTG	
35	514-0001-00	1	-	1	-	1	Fuse 2A Slow Blow	F4
36	514-0073	1	1	1	1	1	Fuse 15A Slow Blow	F3
37	600-0092-49	-	-	.5'	.5'	.5'	Wire, 22 AWG White	
38	600-0092-50	-	-	.5'	.5'	.5'	Wire, 22 AWG Black	
39	600-0094-04	-	-	1	1	1	Wire, 22 AWG Solid Bus Uninsulated	
40	471-0220	1	1	1	1	-	RES 22 OHM 1/2W 5%	R8
41	471-0221	1	1	1	1	1	RES 220 OHM 1/2W 5%	R33
42	213-0003-00	-	-	1	1	1	Socket 14 Pin Socket	V1

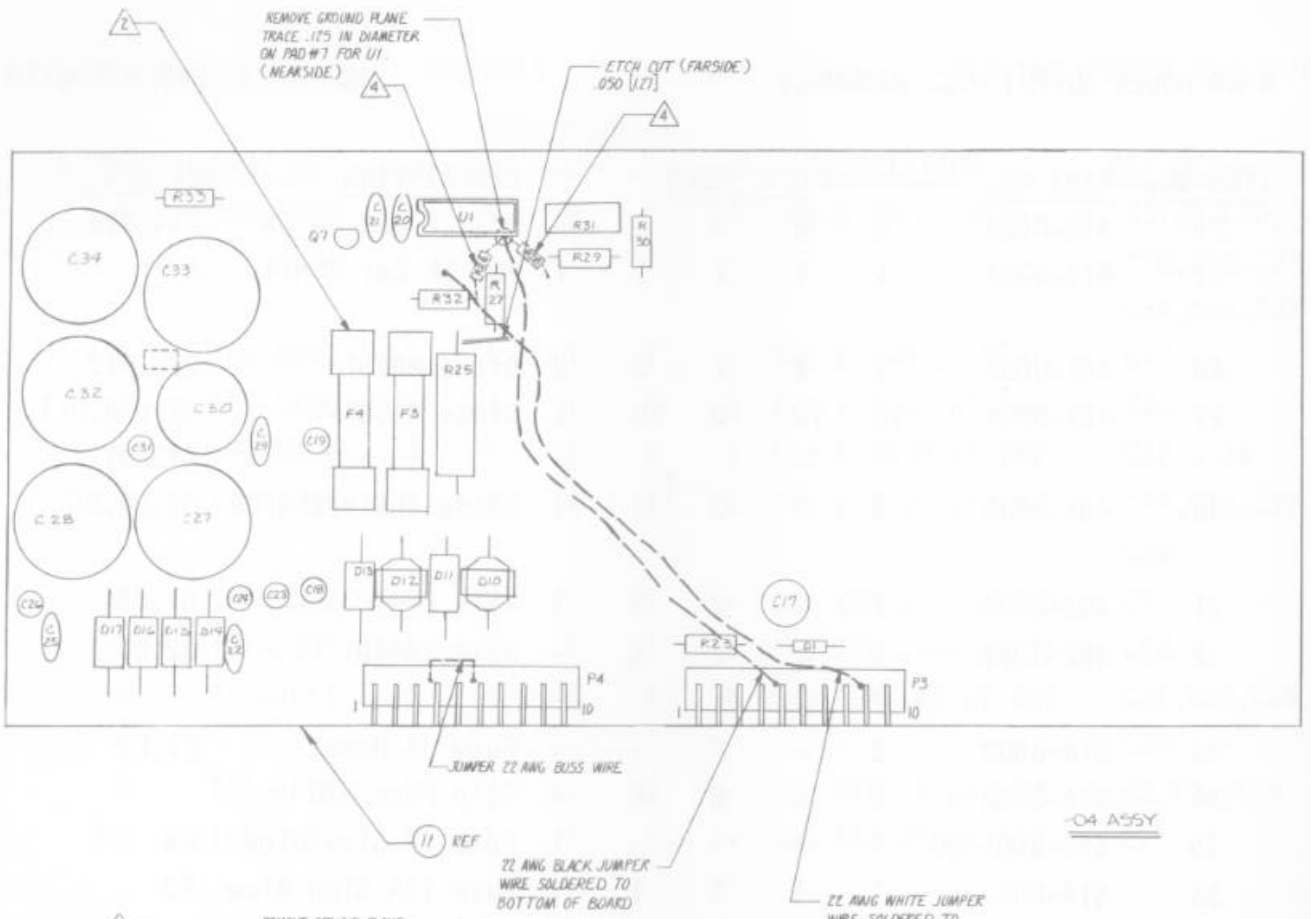
REMOVE GROUND PLANE TRACE .175 IN DIAMETER ON PAD #7 FOR U1. (NEARSIDE.)
ETCH CUT (FARSIDE) .050 [1.27]
JUMPER 22 AWG BUSS WIRE
11 REF
22 AWG BLACK JUMPER WIRE SOLDERED TO BOTTOM OF BOARD
22 AWG WHITE JUMPER WIRE, SOLDERED TO BOTTOM OF BOARD
-04 ASSY

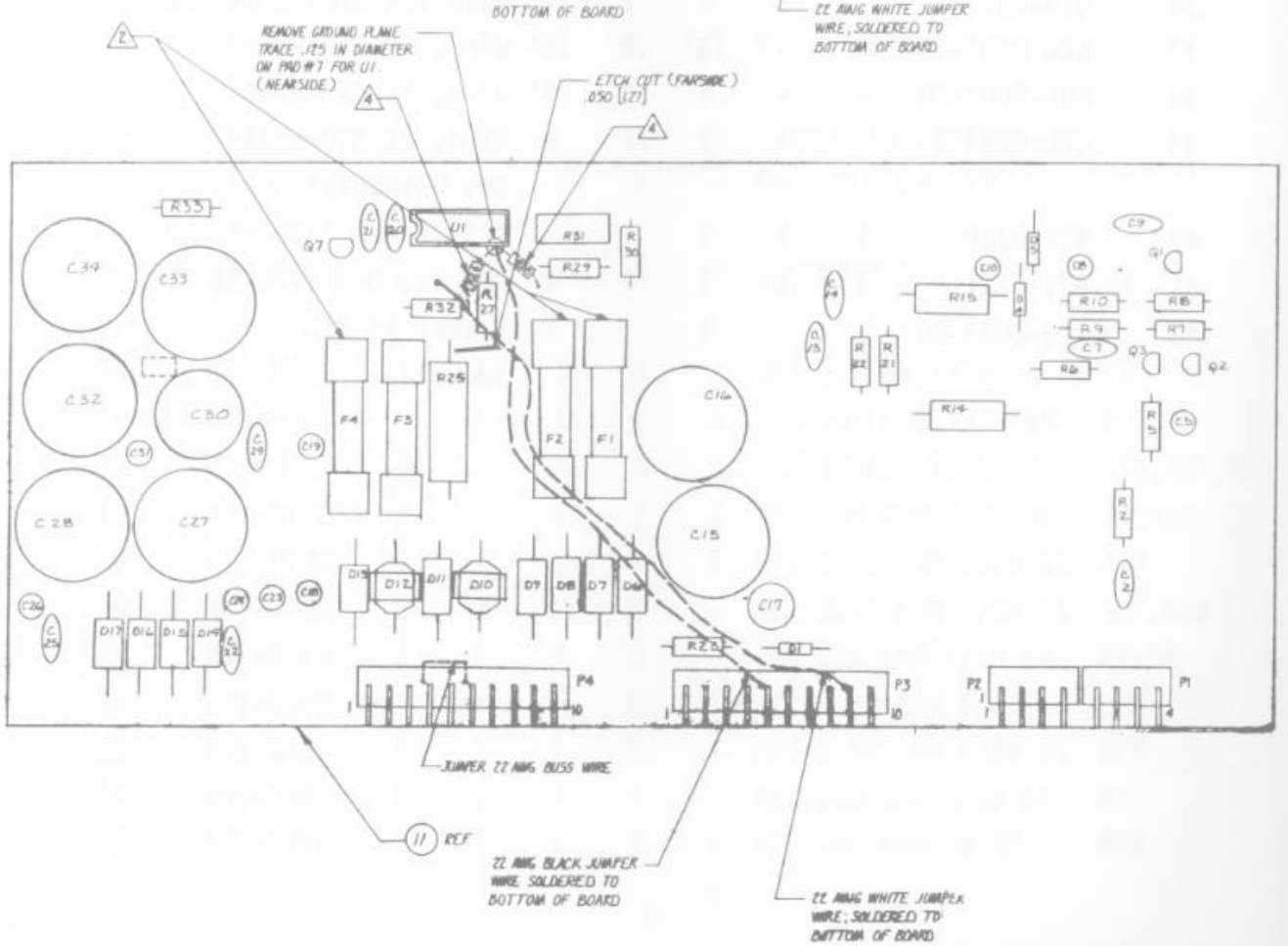
REMOVE GROUND PLANE TRACE .175 IN DIAMETER ON PAD #7 FOR U1. (NEARSIDE.)
ETCH CUT (FARSIDE) .050 [1.27]
JUMPER 22 AWG BUSS WIRE
11 REF
22 AWG BLACK JUMPER WIRE SOLDERED TO BOTTOM OF BOARD
22 AWG WHITE JUMPER WIRE; SOLDERED TO BOTTOM OF BOARD
-02 AND -03 ASSY

Schematics

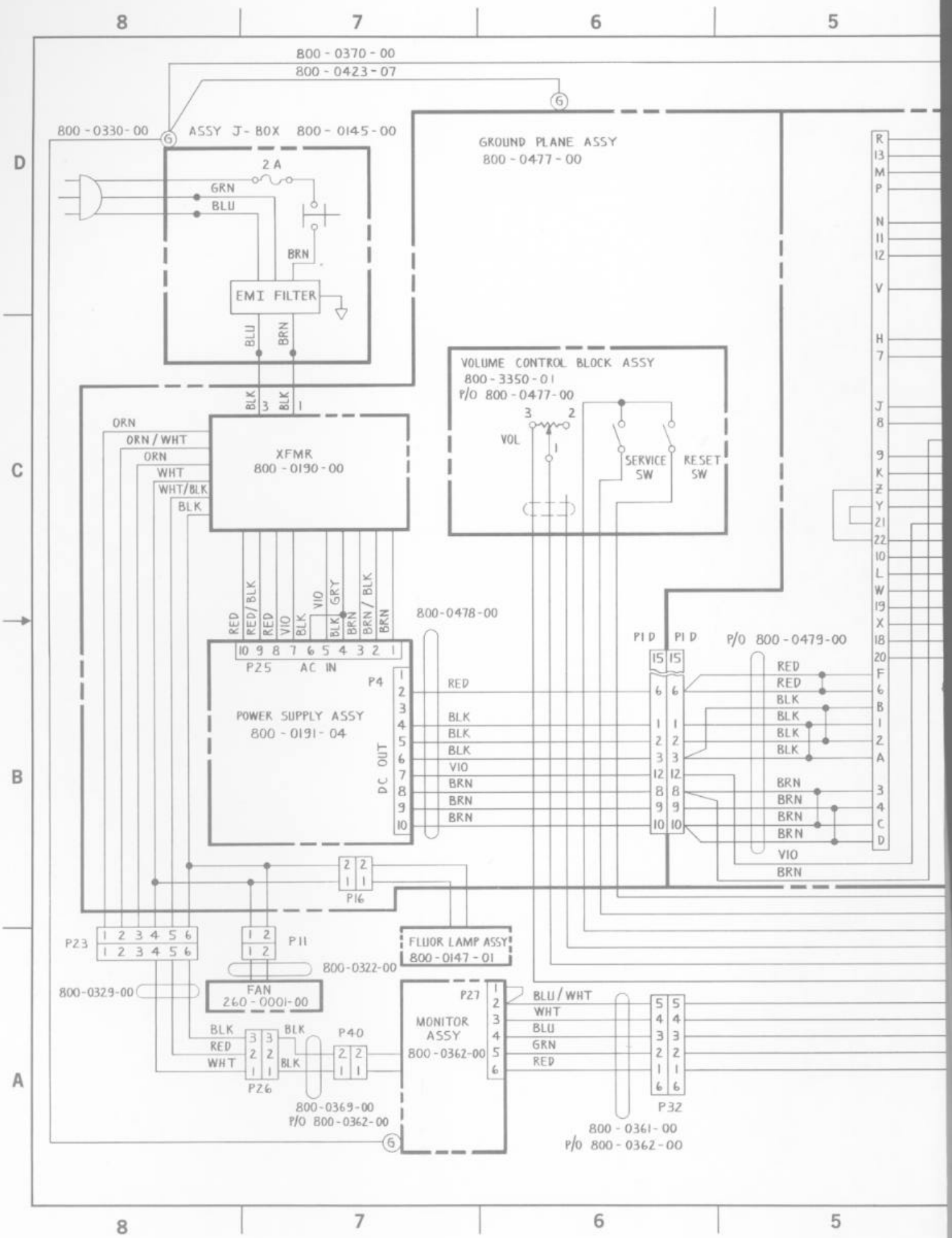
8
7
6
5
D
C
B
A
800 - 0370 - 00
800 - 0423 - 07
800 - 0330 - 00
ASSY J - BOX 800 - 0145 - 00
GROUND PLANE ASSY
800 - 0477 - 00
2 A
GRN
BLU
BRN
EMI FILTER
BLU
BRN
BLK
3
BLK
1
ORN
ORN / WHT
ORN
WHT
WHT/BLK
BLK
XFMR
800 - 0190 - 00
VOLUME CONTROL BLOCK ASSY
800 - 3350 - 01
P/O 800 - 0477 - 00
3
2
1
VOL
SERVICE SW
RESET SW
RED
RED/BLK
RED
VIO
BLK
VIO
GRY
BRN
BRN / BLK
BRN
800-0478-00
10 9 8 7 6 5 4 3 2 1
P25 AC IN
P4
POWER SUPPLY ASSY
800 - 0191 - 04
DC OUT
RED
BLK
BLK
BLK
VIO
BRN
BRN
BRN
P1 D
P1 D
P/O 800 - 0479-00
RED
RED
BLK
BLK
BLK
BLK
BRN
BRN
BRN
BRN
VIO
BRN
P16
P23
P11
FLUOR LAMP ASSY
800 - 0147 - 01
800-0322-00
800-0329-00
FAN
260 - 0001-00
P27
MONITOR ASSY
800 - 0362-00
BLU / WHT
WHT
BLU
GRN
RED
BLK
RED
WHT
BLK
BLK
P40
PZ6
800-0369-00
P/O 800 - 0362-00
P32
800 - 0361- 00
P/O 800 - 0362 - 00

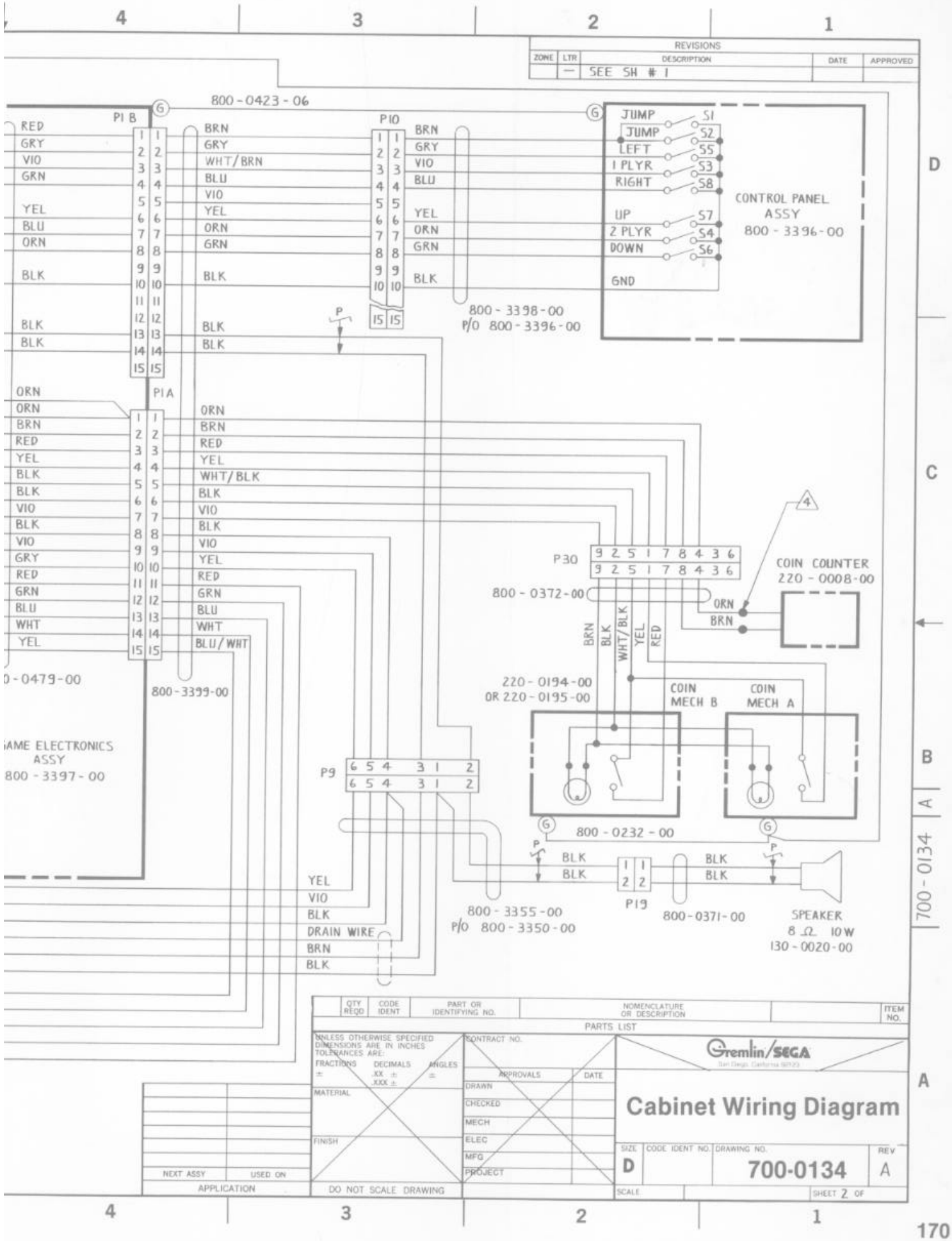
REVISIONS
ZONE | LTR | DESCRIPTION | DATE | APPROVED
— | SEE SH # 1
800-0423-06
P1B
P10
P1A
RED
GRY
VIO
GRN
YEL
BLU
ORN
BLK
BRN
WHT/BRN
WHT/BLK
BLU/WHT
JUMP
LEFT
1 PLYR
RIGHT
UP
2 PLYR
DOWN
GND
S1
S2
S5
S3
S8
S7
S4
S6
CONTROL PANEL
ASSY
800-3396-00
800-3398-00
P/O 800-3396-00
800-3399-00
800-0479-00
AME ELECTRONICS
ASSY
800-3397-00
P30
9 2 5 1 7 8 4 3 6
800-0372-00
COIN COUNTER
220-0008-00
220-0194-00
OR 220-0195-00
COIN
MECH B
COIN
MECH A
P9
6 5 4 3 1 2
800-0232-00
DRAIN WIRE
800-3355-00
P/O 800-3350-00
P19
800-0371-00
SPEAKER
8 Ω 10W
130-0020-00
QTY REQD | CODE IDENT | PART OR IDENTIFYING NO. | NOMENCLATURE OR DESCRIPTION | ITEM NO.
PARTS LIST
UNLESS OTHERWISE SPECIFIED DIMENSIONS ARE IN INCHES
TOLERANCES ARE:
FRACTIONS ± DECIMALS .XX ± .XXX ± ANGLES ±
MATERIAL
FINISH
CONTRACT NO.
APPROVALS | DATE
DRAWN
CHECKED
MECH
ELEC
MFG
PROJECT
NEXT ASSY | USED ON
APPLICATION
DO NOT SCALE DRAWING
Gremlin/SEGA
Cabinet Wiring Diagram
SIZE D | CODE IDENT NO. | DRAWING NO. 700-0134 | REV A
SCALE | SHEET 2 OF
700-0134 A
4 3 2 1
D C B A

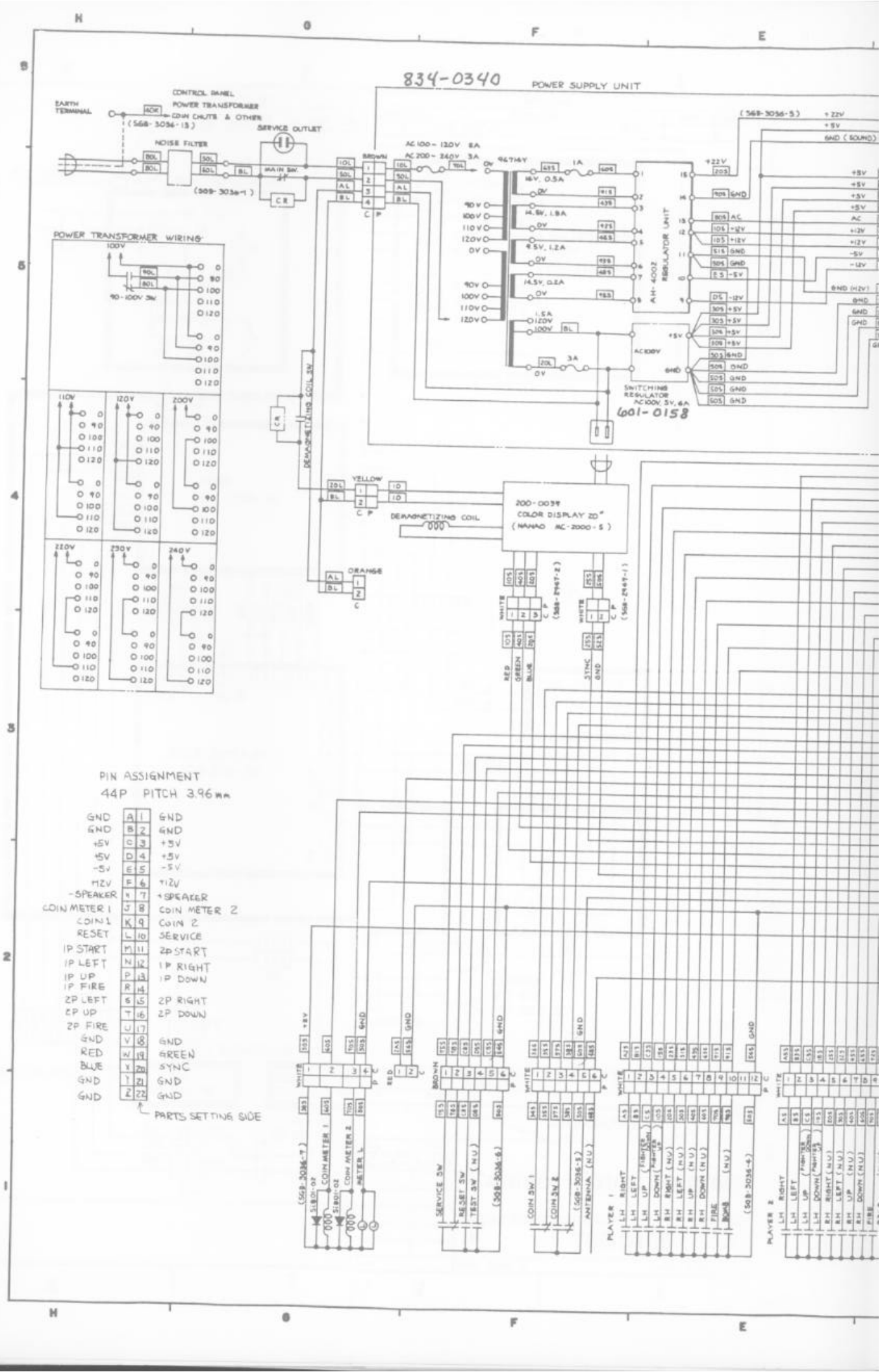
834-0340
POWER SUPPLY UNIT
CONTROL PANEL
POWER TRANSFORMER
EARTH TERMINAL
COIN CHUTE & OTHER
(568-3036-13)
NOISE FILTER
SERVICE OUTLET
MAIN SW.
C.B.
(568-3036-1)
AC 100~120V 8A
AC 200~240V 3A
POWER TRANSFORMER WIRING
100V
90~100V 3W
110V
120V
200V
220V
230V
240V
DEMAGNETIZING COIL 3W
DEMAGNETIZING COIL
YELLOW
ORANGE
200-0039
COLOR DISPLAY 20"
(NANAO AC-2000-5)
WHITE
RED
GREEN
BLUE
SYNC
GND
(568-2947-2)
(568-2947-1)
AH-4002
REGULATOR UNIT
SWITCHING REGULATOR
AC100V, 5V, 6A
601-0158
(568-3036-5)
+22V
+5V
GND (SOUND)
AC
+12V
-5V
-12V
GND (H2V)
PIN ASSIGNMENT
44P PITCH 3.96mm
GND
+5V
-5V
+12V
-SPEAKER
+SPEAKER
COIN METER 1
COIN METER 2
COIN 1
COIN 2
RESET
SERVICE
1P START
2P START
1P LEFT
1P RIGHT
1P UP
1P DOWN
1P FIRE
2P LEFT
2P RIGHT
2P UP
2P DOWN
2P FIRE
PARTS SETTING SIDE
(568-3036-7)
COIN METER 1
COIN METER 2
METER 1
(568-3036-6)
SERVICE SW
RESET SW
TEST SW (NU)
(568-3036-5)
COIN SW 1
COIN SW 2
ANTENNA (NU)
(568-3036-4)
PLAYER 1
PLAYER 2
LH RIGHT
LH LEFT
LH UP
LH DOWN
RH RIGHT (NU)
RH LEFT (NU)
RH UP (NU)
RH DOWN (NU)
FIRE
BOMB (NU)

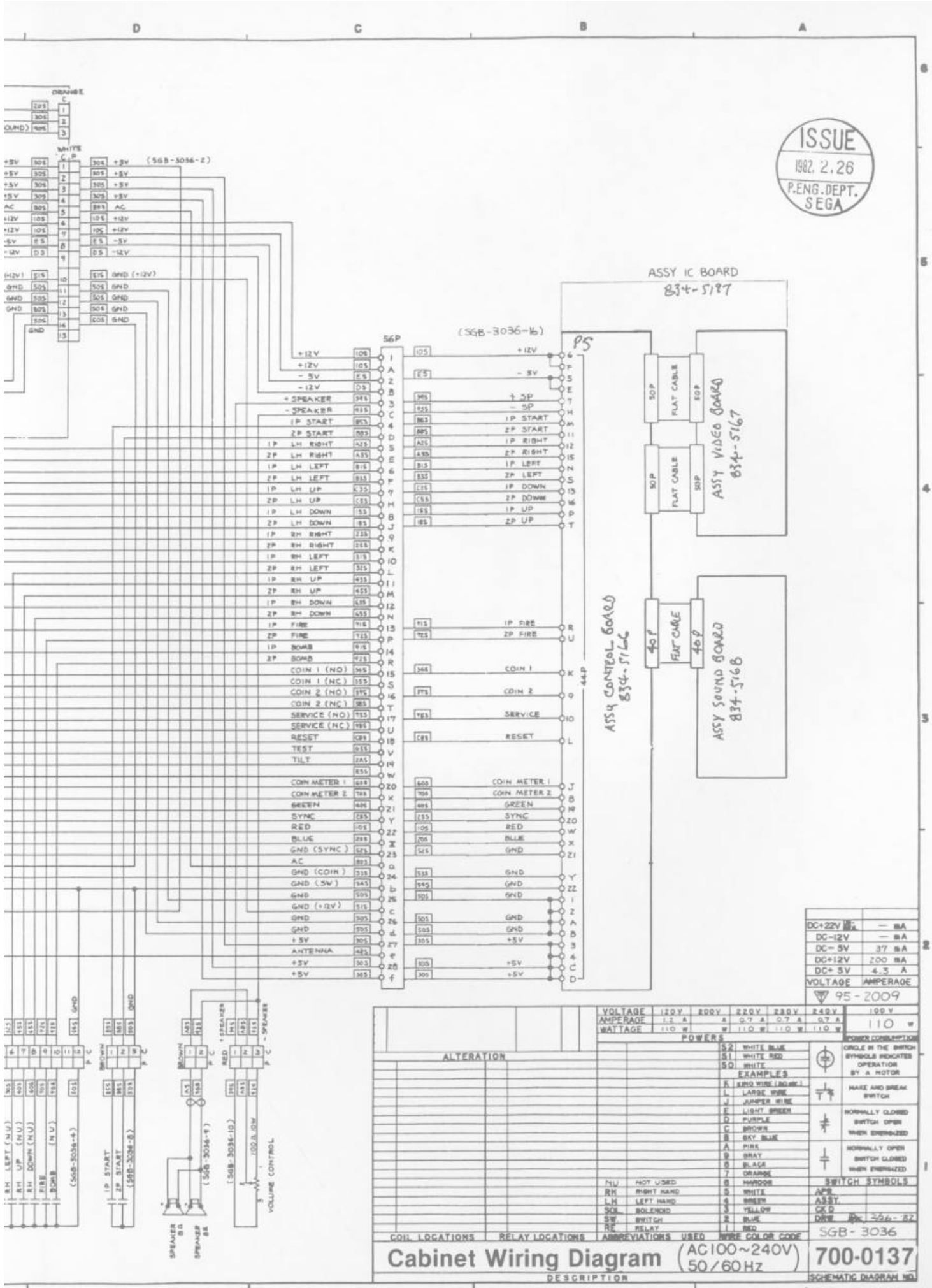
ISSUE
1982. 2. 26
P.ENG.DEPT.
SEGA
ASSY IC BOARD
834-5197
(SGB-3036-16)
56P
P5
44P
ASSY CONTROL BOARD
834-5166
ASSY VIDEO BOARD
834-5167
ASSY SOUND BOARD
834-5168
50P FLAT CABLE 50P
40P FLAT CABLE 40P
(SGB-3036-2)
(SGB-3036-4)
(SGB-3036-8)
(SGB-3036-9)
(SGB-3036-10)
VOLUME CONTROL
SPEAKER 8Ω
SPEAKER 8Ω
DC+22V — mA
DC-12V — mA
DC-5V 37 mA
DC+12V 200 mA
DC+5V 4.3 A
VOLTAGE AMPERAGE
95-2009
ALTERATION
EXAMPLES
SWITCH SYMBOLS
COIL LOCATIONS
RELAY LOCATIONS
ABBREVIATIONS USED
WIRE COLOR CODE
SGB-3036
Cabinet Wiring Diagram (AC100~240V 50/60Hz)
700-0137
DESCRIPTION
SCHEMATIC DIAGRAM NO.

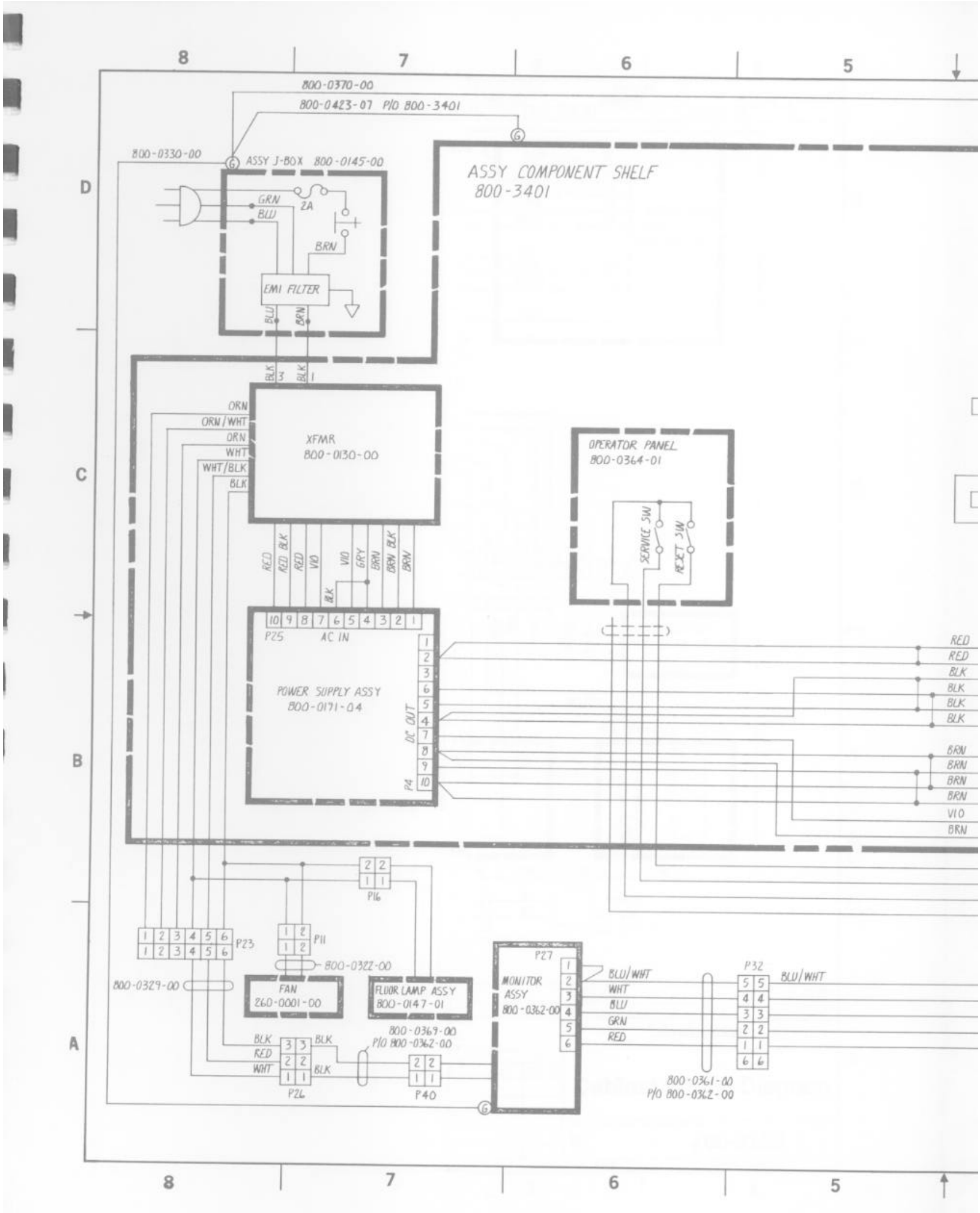
800-0370-00
800-0423-07 P/O 800-3401
800-0330-00
ASSY J-BOX 800-0145-00
ASSY COMPONENT SHELF
800-3401
GRN
BLU
2A
BRN
EMI FILTER
BLU
BRN
BLK 3
BLK 1
XFMR
800-0130-00
ORN
ORN/WHT
ORN
WHT
WHT/BLK
BLK
OPERATOR PANEL
800-0364-01
SERVICE SW
RESET SW
RED
RED/BLK
RED
VIO
VIO
GRY
BRN
BRN/BLK
BRN
BLK
10 9 8 7 6 5 4 3 2 1
P25 AC IN
POWER SUPPLY ASSY
800-0171-04
DC OUT
P4
1 2 3 6 5 4 7 8 9 10
RED
RED
BLK
BLK
BLK
BLK
BRN
BRN
BRN
BRN
VIO
BRN
P16
2 2
1 1
1 2 3 4 5 6
1 2 3 4 5 6
P23
1 2
1 2
P11
800-0322-00
800-0329-00
FAN
260-0001-00
FLUOR LAMP ASSY
800-0147-01
800-0369-00
P/O 800-0362-00
BLK
RED
WHT
3 3
2 2
1 1
BLK
BLK
P26
2 2
1 1
P40
P27
MONITOR
ASSY
800-0362-00
1 2 3 4 5 6
BLU/WHT
WHT
BLU
GRN
RED
P32
5 5
4 4
3 3
2 2
1 1
6 6
BLU/WHT
800-0361-00
P/O 800-0362-00
8
7
6
5
D
C
B
A

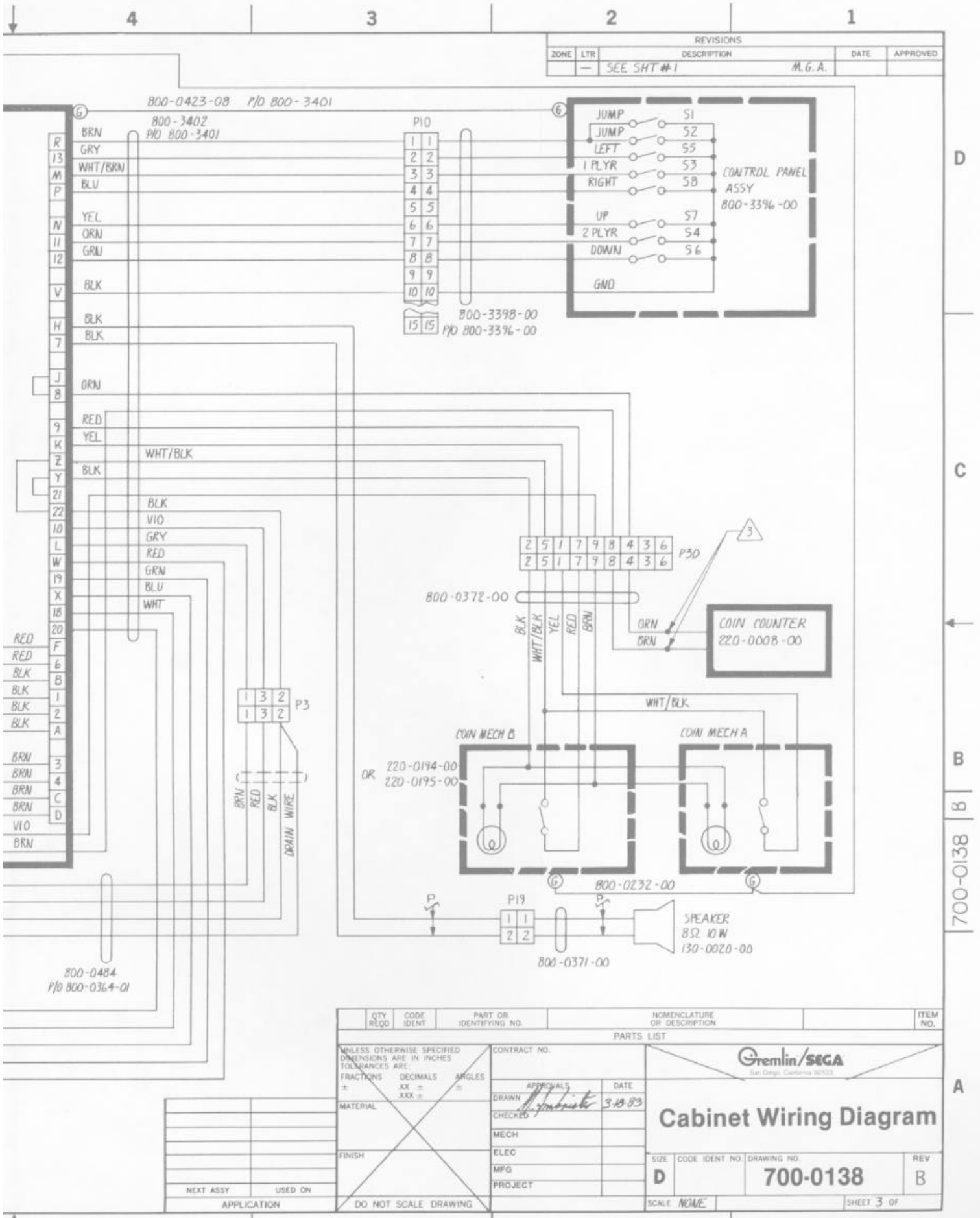
REVISIONS
ZONE | LTR | DESCRIPTION | DATE | APPROVED
— | SEE SHT #1 M.G.A.
800-0423-08 P/O 800-3401
800-3402 P/O 800-3401
P10
JUMP S1
JUMP S2
LEFT S5
1 PLYR S3
RIGHT S8
UP S7
2 PLYR S4
DOWN S6
GND
CONTROL PANEL ASSY 800-3396-00
800-3398-00 P/O 800-3396-00
BRN
GRY
WHT/BRN
BLU
YEL
ORN
GRN
BLK
BLK
BLK
ORN
RED
YEL
WHT/BLK
BLK
BLK
VIO
GRY
RED
GRN
BLU
WHT
RED
RED
BLK
BLK
BLK
BLK
BRN
BRN
BRN
BRN
VIO
BRN
P30
800-0372-00
BLK
WHT/BLK
YEL
RED
BRN
ORN
BRN
COIN COUNTER 220-0008-00
P3
BRN
RED
BLK
DRAIN WIRE
WHT/BLK
COIN MECH B
COIN MECH A
OR 220-0194-00
220-0195-00
800-0232-00
P19
SPEAKER 8Ω 10W 130-0020-00
800-0371-00
800-0484 P/O 800-0364-01
PARTS LIST
QTY REQD | CODE IDENT | PART OR IDENTIFYING NO. | NOMENCLATURE OR DESCRIPTION | ITEM NO.
UNLESS OTHERWISE SPECIFIED DIMENSIONS ARE IN INCHES TOLERANCES ARE:
FRACTIONS ± DECIMALS XX ± XXX ± ANGLES ±
MATERIAL
FINISH
NEXT ASSY | USED ON
APPLICATION
DO NOT SCALE DRAWING
CONTRACT NO.
APPROVALS | DATE
DRAWN 3.18.83
CHECKED
MECH
ELEC
MFG
PROJECT
Gremlin/SEGA
San Diego, California 92123
Cabinet Wiring Diagram
SIZE D | CODE IDENT NO. | DRAWING NO. 700-0138 | REV B
SCALE NONE
SHEET 3 OF
700-0138 B
4 3 2 1
D C B A

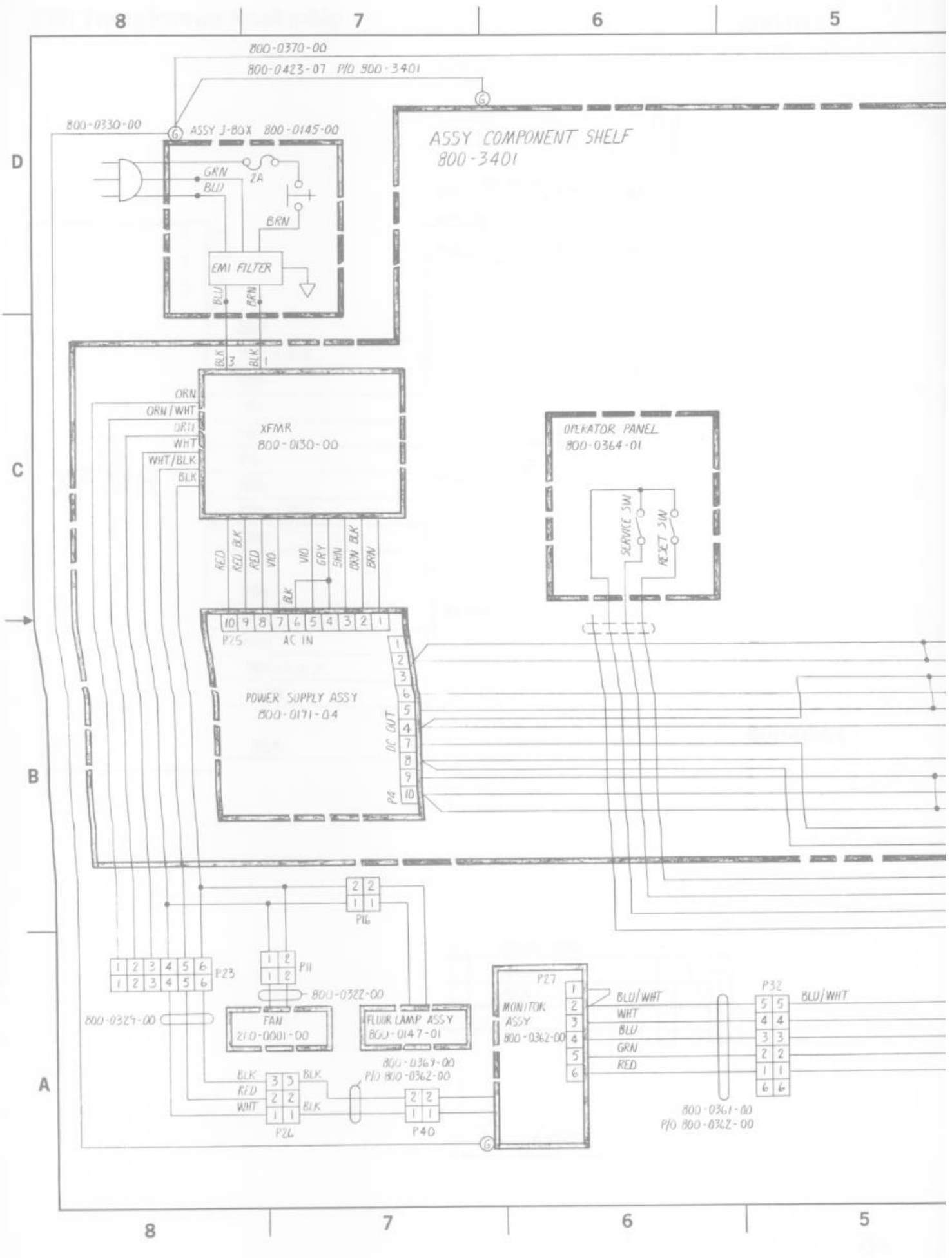
8
7
6
5
D
C
B
A
800-0370-00
800-0423-07 P/O 800-3401
800-0330-00
ASSY J-BOX 800-0145-00
ASSY COMPONENT SHELF
800-3401
GRN
BLU
2A
BRN
EMI FILTER
BLU
BRN
BLK
BLK
ORN
ORN/WHT
ORN
WHT
WHT/BLK
BLK
XFMR
800-0130-00
OPERATOR PANEL
800-0364-01
SERVICE SW
REJECT SW
RED
RED/BLK
RED
VIO
VIO
GRY
GRN
ORN/BLK
BRN
BLK
10 9 8 7 6 5 4 3 2 1
P25
AC IN
POWER SUPPLY ASSY
800-0171-04
DC OUT
P4
1 2 3 4 5 6
P23
1 2
P11
800-0322-00
800-0329-00
FAN
210-0001-00
FLUOR LAMP ASSY
800-0147-01
800-0369-00
P/O 800-0362-00
BLK
RED
WHT
BLK
P26
P40
2 2
1 1
P16
P27
MONITOR ASSY
800-0362-00
BLU/WHT
WHT
BLU
GRN
RED
P32
BLU/WHT
800-0361-00
P/O 800-0362-00

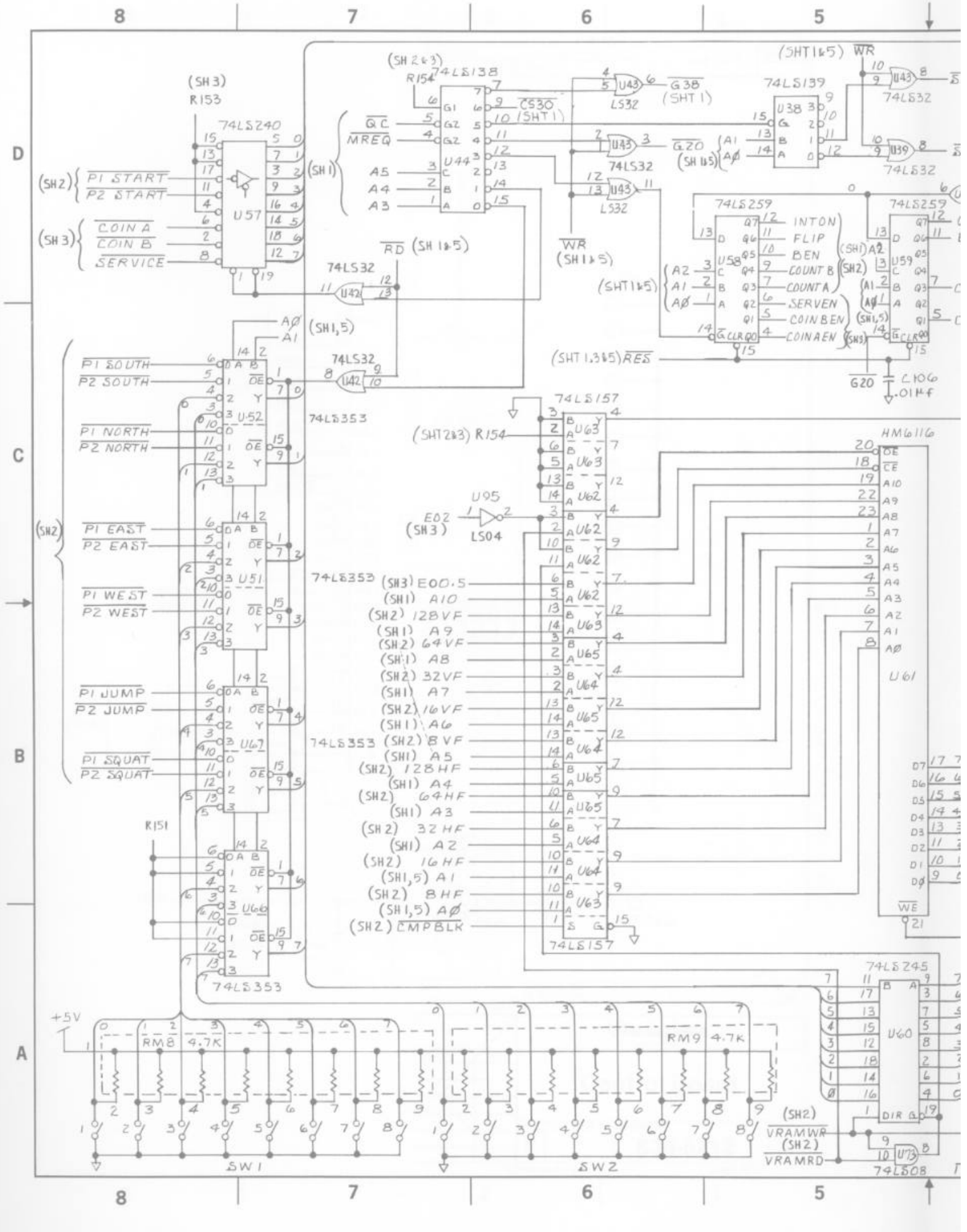

8
7
6
5
D
C
B
A
74LS240
U57
(SH3) R153
(SH2) P1 START
P2 START
(SH3) COIN A
COIN B
SERVICE
74LS138
U44
(SH2&3) R154
(SH1)
QC
MREQ
A5
A4
A3
CS30 (SHT1)
G38 (SHT1)
G20 (SH1&5)
LS32
74LS139
U38
(SHT1&5) WR
74LS32
74LS259
U58
U59
INTON
FLIP
BEN
COUNT B
COUNT A
SERVEN
COIN BEN
COIN AEN
(SHT1&5)
(SHT1,3&5) RES
G20
C106 .01μF
RD (SH1&5)
WR (SH1&5)
74LS32
U42
(SH1,5)
A0
A1
P1 SOUTH
P2 SOUTH
P1 NORTH
P2 NORTH
P1 EAST
P2 EAST
P1 WEST
P2 WEST
P1 JUMP
P2 JUMP
P1 SQUAT
P2 SQUAT
U52
U51
U67
U66
74LS353
R151
74LS157
U63
U62
U65
U64
U95
LS04
E02 (SH3)
(SH3) E00.5
(SH1) A10
(SH2) 128VF
(SH1) A9
(SH2) 64VF
(SH1) A8
(SH2) 32VF
(SH1) A7
(SH2) 16VF
(SH1) A6
(SH2) 8VF
(SH1) A5
(SH2) 128HF
(SH1) A4
(SH2) 64HF
(SH1) A3
(SH2) 32HF
(SH1) A2
(SH2) 16HF
(SH1,5) A1
(SH2) 8HF
(SH1,5) A0
(SH2) CMPBLK
HM6116
U61
WE
74LS245
U60
DIR
(SH2) VRAMWR
(SH2) VRAMRD
U73
74LS08
+5V
RM8 4.7K
RM9 4.7K
SW1
SW2

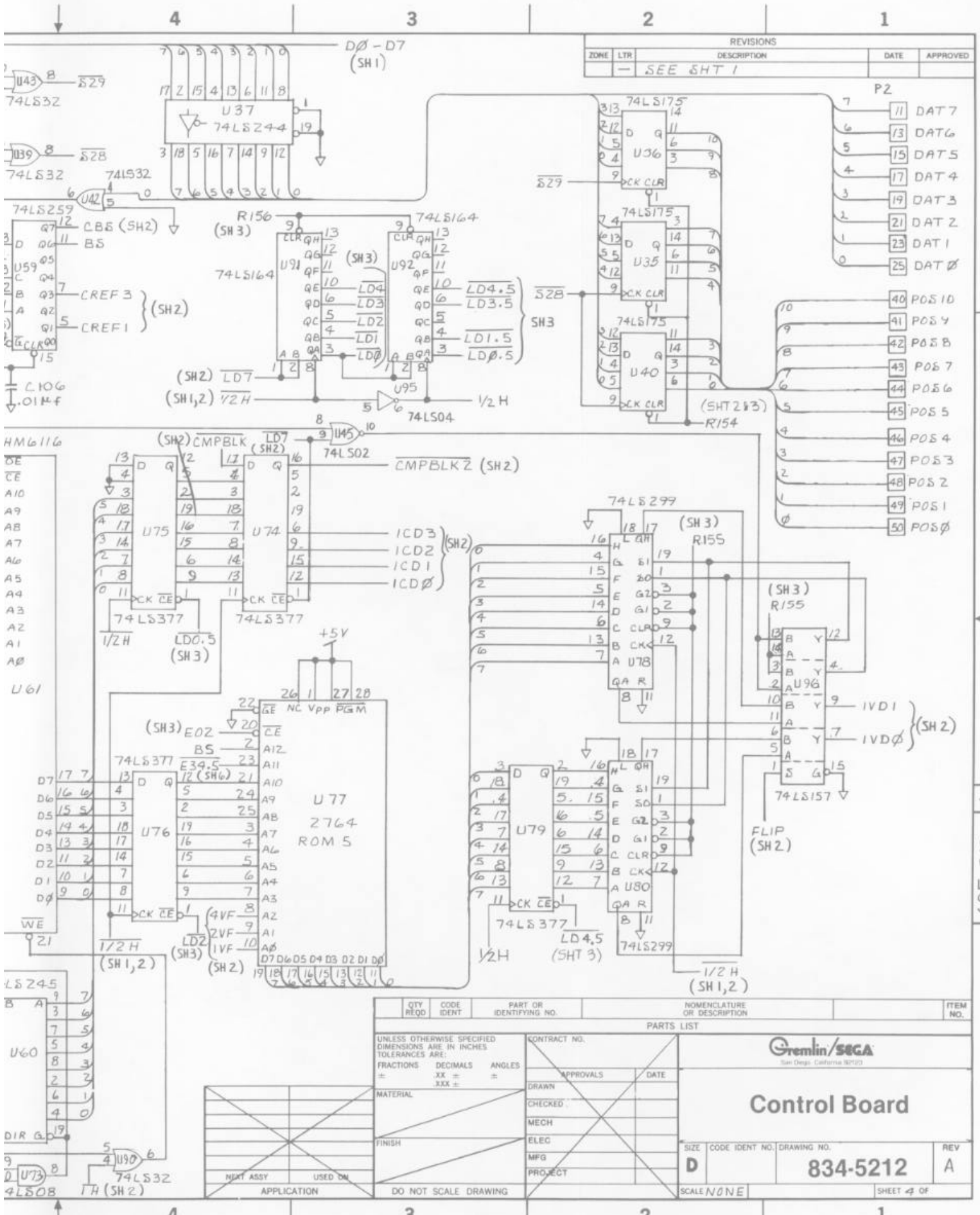
REVISIONS
ZONE LTR DESCRIPTION DATE APPROVED
— SEE SHT 1
DØ - D7 (SH1)
U37 74LS244
74LS32
74LS259
U59
CBS (SH2)
BS
CREF3
CREF1
(SH2)
C106 .01μF
R156 (SH3)
74LS164
U91
U92
LD4
LD3
LD2
LD1
LDØ
LD4.5
LD3.5
LD1.5
LDØ.5
SH3
(SH2) LD7
(SH1,2) 1/2H
U95
74LS04
1/2H
74LS175
U36
U35
U40
(SHT 2&3)
R154
P2
DAT7
DAT6
DAT5
DAT4
DAT3
DAT2
DAT1
DATØ
POS10
POS9
POS8
POS7
POS6
POS5
POS4
POS3
POS2
POS1
POSØ
HM6116
U61
U45
74LS02
(SH2) CMPBLK
CMPBLK2 (SH2)
U75
U74
74LS377
ICD3
ICD2
ICD1
ICDØ
LD0.5 (SH3)
74LS299
U78
R155
U96
74LS157
IVD1
IVDØ
FLIP (SH2)
+5V
U77 2764 ROM 5
(SH3) E02
BS
E34.5 (SH6)
U76
U79
U80
LD4.5 (SHT 3)
1/2H (SH1,2)
WE
LS245
U60
DIR G
U73
74LS08
U90
74LS32
1H (SH2)
605-5181 A
QTY REQD
CODE IDENT
PART OR IDENTIFYING NO.
NOMENCLATURE OR DESCRIPTION
ITEM NO.
PARTS LIST
UNLESS OTHERWISE SPECIFIED DIMENSIONS ARE IN INCHES TOLERANCES ARE:
FRACTIONS ±
DECIMALS .XX ± .XXX ±
ANGLES ±
MATERIAL
FINISH
CONTRACT NO.
APPROVALS
DATE
DRAWN
CHECKED
MECH
ELEC
MFG
PROJECT
Gremlin/SEGA
San Diego, California 92123
Control Board
SIZE D
CODE IDENT NO.
DRAWING NO. 834-5212
REV A
SCALE NONE
SHEET 4 OF
NEXT ASSY
USED ON
APPLICATION
DO NOT SCALE DRAWING

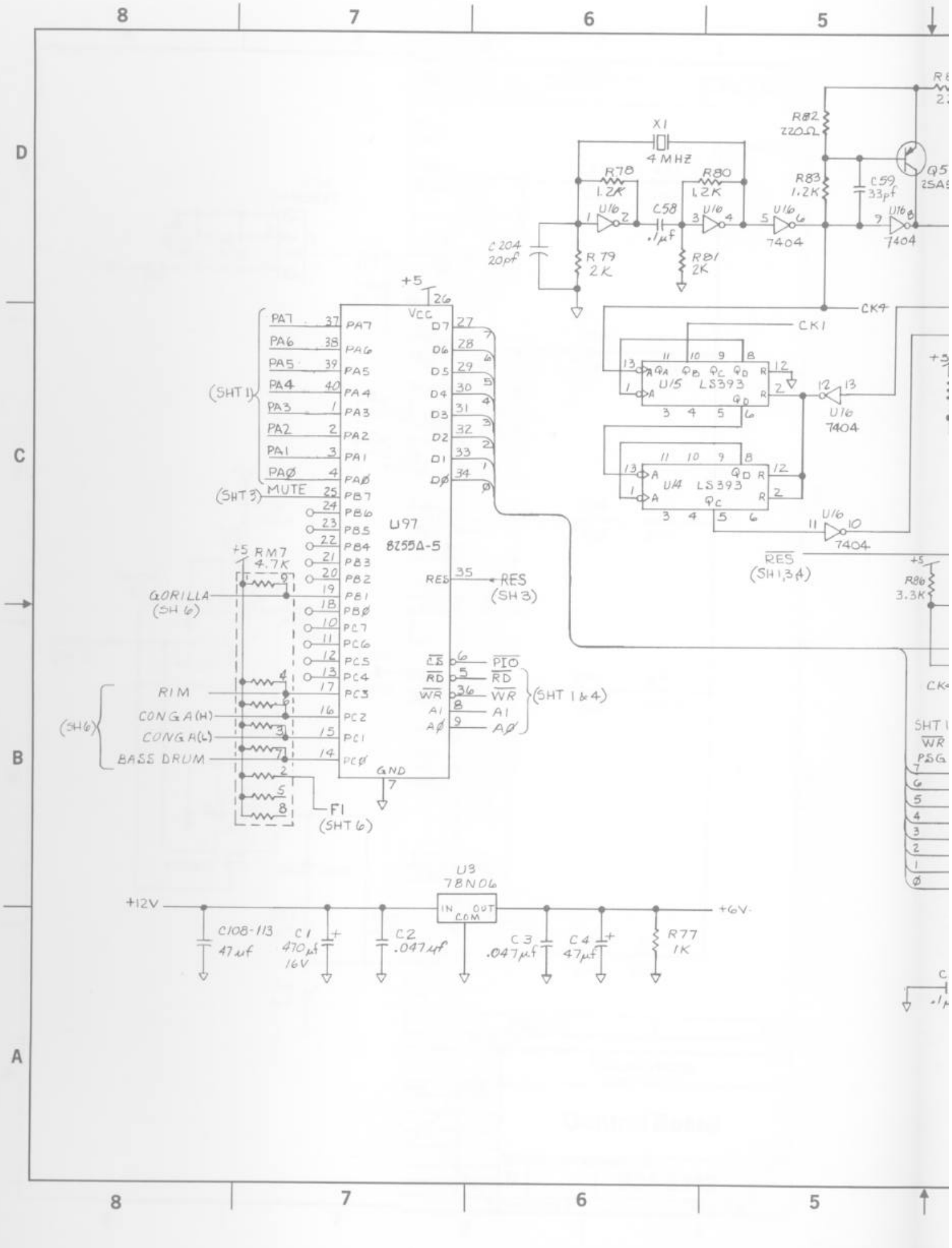
8
7
6
5
D
C
B
A
X1
4 MHZ
R78
1.2K
R80
1.2K
C58
.1µf
R79
2K
R81
2K
C204
20pf
U16
7404
R82
220Ω
R83
1.2K
C59
33pf
Q5
2SA
CK4
CK1
U15
LS393
U14
LS393
RES
(SH1,3,4)
R86
3.3K
+5
26
Vcc
U97
8255A-5
PA7
PA6
PA5
PA4
PA3
PA2
PA1
PAØ
MUTE
(SHT 3)
(SHT 1)
PB7
PB6
PB5
PB4
PB3
PB2
PB1
PBØ
PC7
PC6
PC5
PC4
PC3
PC2
PC1
PCØ
GND
D7
D6
D5
D4
D3
D2
D1
DØ
RES
(SH 3)
CS
RD
WR
A1
AØ
PIO
RD
WR
A1
AØ
(SHT 1 & 4)
RM7
4.7K
GORILLA
(SH 6)
RIM
CONGA(H)
CONGA(L)
BASS DRUM
(SH6)
F1
(SHT 6)
U3
78N06
IN
OUT
COM
+12V
+6V
C108-113
47µf
C1
470µf
16V
C2
.047µf
C3
.047µf
C4
47µf
R77
1K

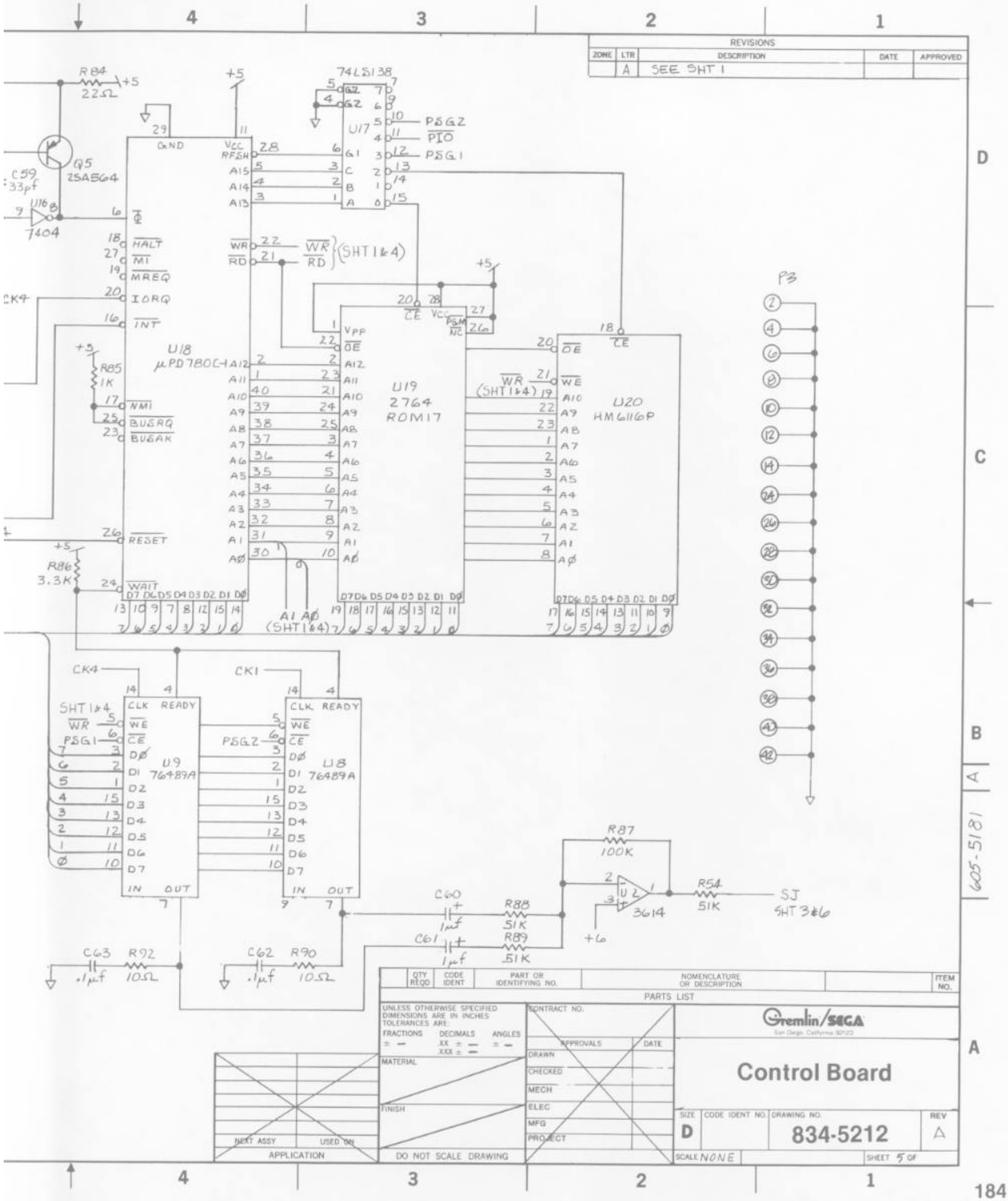
REVISIONS
ZONE | LTR | DESCRIPTION | DATE | APPROVED
A | SEE SHT 1
R84 22Ω
Q5 2SA564
C59 33pf
U16 7404
74LS138
U17
PSG2
PIO
PSG1
U18 μPD780C-1
U19 2764 ROM17
U20 HM6116P
WR (SHT 1&4)
A1 A0 (SHT 1&4)
R85 1K
R86 3.3K
CK4
CK1
U9 76489A
U8 76489A
SHT 1&4
PSG1
PSG2
R87 100K
U2 3614
R54 51K
SJ SHT 3&6
C60 1μf
R88 51K
C61 1μf
R89 51K
C63 .1μf
R92 10Ω
C62 .1μf
R90 10Ω
P3
605-5181
QTY REQD | CODE IDENT | PART OR IDENTIFYING NO. | NOMENCLATURE OR DESCRIPTION | ITEM NO.
PARTS LIST
UNLESS OTHERWISE SPECIFIED DIMENSIONS ARE IN INCHES TOLERANCES ARE:
FRACTIONS ± — DECIMALS .XX ± — .XXX ± — ANGLES ± —
MATERIAL
FINISH
DO NOT SCALE DRAWING
NEXT ASSY | USED ON
APPLICATION
CONTRACT NO.
APPROVALS | DATE
DRAWN
CHECKED
MECH
ELEC
MFG
PROJECT
Gremlin/SEGA
San Diego, California 92123
Control Board
SIZE D | CODE IDENT NO. | DRAWING NO. 834-5212 | REV A
SCALE NONE | SHEET 5 OF

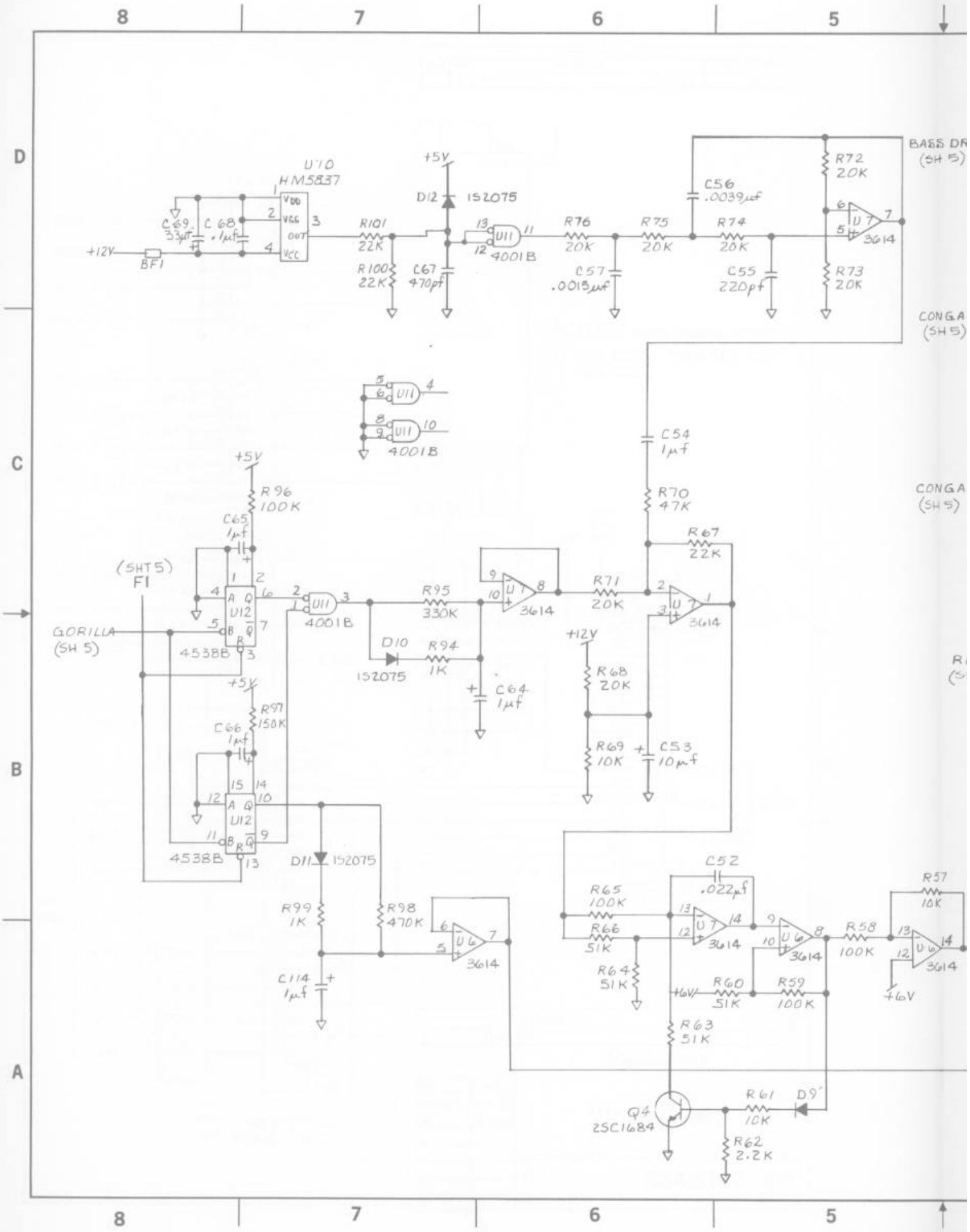

8
7
6
5
D
C
B
A
U10
HM5837
VDD
VGG
OUT
VCC
C69
33µf
C68
.1µf
+12V
BF1
R101
22K
R100
22K
+5V
D12
1S2075
C67
470pf
U11
4001B
R76
20K
C57
.0015µf
R75
20K
C56
.0039µf
R74
20K
C55
220pf
R72
20K
R73
20K
U7
3614
BASS DR
(SH 5)
CONGA
(SH 5)
C54
1µf
R70
47K
R67
22K
R71
20K
R68
20K
R69
10K
C53
10µf
R96
100K
C65
1µf
(SHT5)
F1
GORILLA
(SH 5)
U12
4538B
R95
330K
D10
1S2075
R94
1K
C64
1µf
R97
150K
C66
1µf
D11
1S2075
R99
1K
R98
470K
C114
1µf
U6
3614
C52
.022µf
R65
100K
R66
51K
R64
51K
R60
51K
R59
100K
R63
51K
R58
100K
R57
10K
+6V
Q4
2SC1684
R61
10K
D9'
R62
2.2K

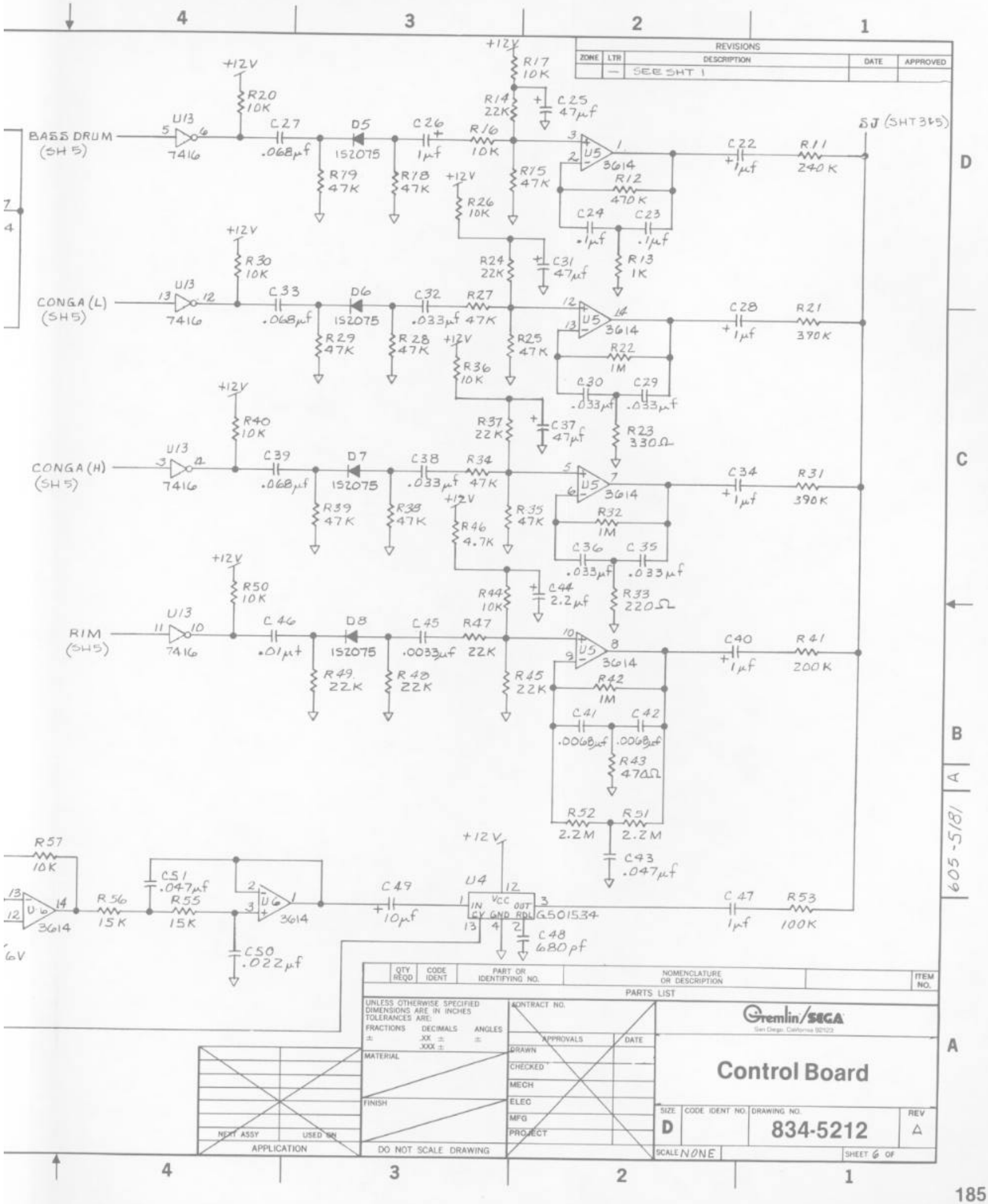
REVISIONS
ZONE LTR DESCRIPTION DATE APPROVED
— SEE SHT 1
BASS DRUM (SH 5)
CONGA (L) (SH5)
CONGA (H) (SH5)
RIM (SH5)
SJ (SHT 3&5)
U13 7416
U5 3614
U6 3614
U4 G501534
+12V
R20 10K
R30 10K
R40 10K
R50 10K
R57 10K
R56 15K
R55 15K
R17 10K
R14 22K
R16 10K
R15 47K
R24 22K
R27 47K
R25 47K
R37 22K
R34 47K
R35 47K
R44 10K
R47 22K
R45 22K
R12 470K
R13 1K
R22 1M
R23 330Ω
R32 1M
R33 220Ω
R42 1M
R43 470Ω
R52 2.2M
R51 2.2M
R11 240K
R21 390K
R31 390K
R41 200K
R53 100K
C27 .068μf
C26 1μf
C25 47μf
C33 .068μf
C32 .033μf
C31 47μf
C39 .068μf
C38 .033μf
C37 47μf
C46 .01μf
C45 .0033μf
C44 2.2μf
C22 1μf
C28 1μf
C34 1μf
C40 1μf
C47 1μf
C49 10μf
C48 680pf
C51 .047μf
C50 .022μf
D5 1S2075
D6 1S2075
D7 1S2075
D8 1S2075
R79 47K
R78 47K
R26 10K
R29 47K
R28 47K
R36 10K
R39 47K
R38 47K
R46 4.7K
R49 22K
R48 22K
R46 4.7K
R43 470Ω
R52 2.2M
R51 2.2M
C43 .047μf
C24 .1μf
C23 .1μf
C30 .033μf
C29 .033μf
C36 .033μf
C35 .033μf
C41 .0068μf
C42 .0068μf
C51 .047μf
605-5181 A
QTY REQD CODE IDENT PART OR IDENTIFYING NO. NOMENCLATURE OR DESCRIPTION ITEM NO.
PARTS LIST
UNLESS OTHERWISE SPECIFIED DIMENSIONS ARE IN INCHES TOLERANCES ARE:
FRACTIONS ± DECIMALS .XX ± .XXX ± ANGLES ±
MATERIAL
FINISH
DO NOT SCALE DRAWING
CONTRACT NO.
APPROVALS DATE
DRAWN
CHECKED
MECH
ELEC
MFG
PROJECT
NEXT ASSY USED ON
APPLICATION
Gremlin/SEGA
San Diego, California 92123
Control Board
SIZE D CODE IDENT NO. DRAWING NO. 834-5212 REV A
SCALE NONE SHEET 6 OF

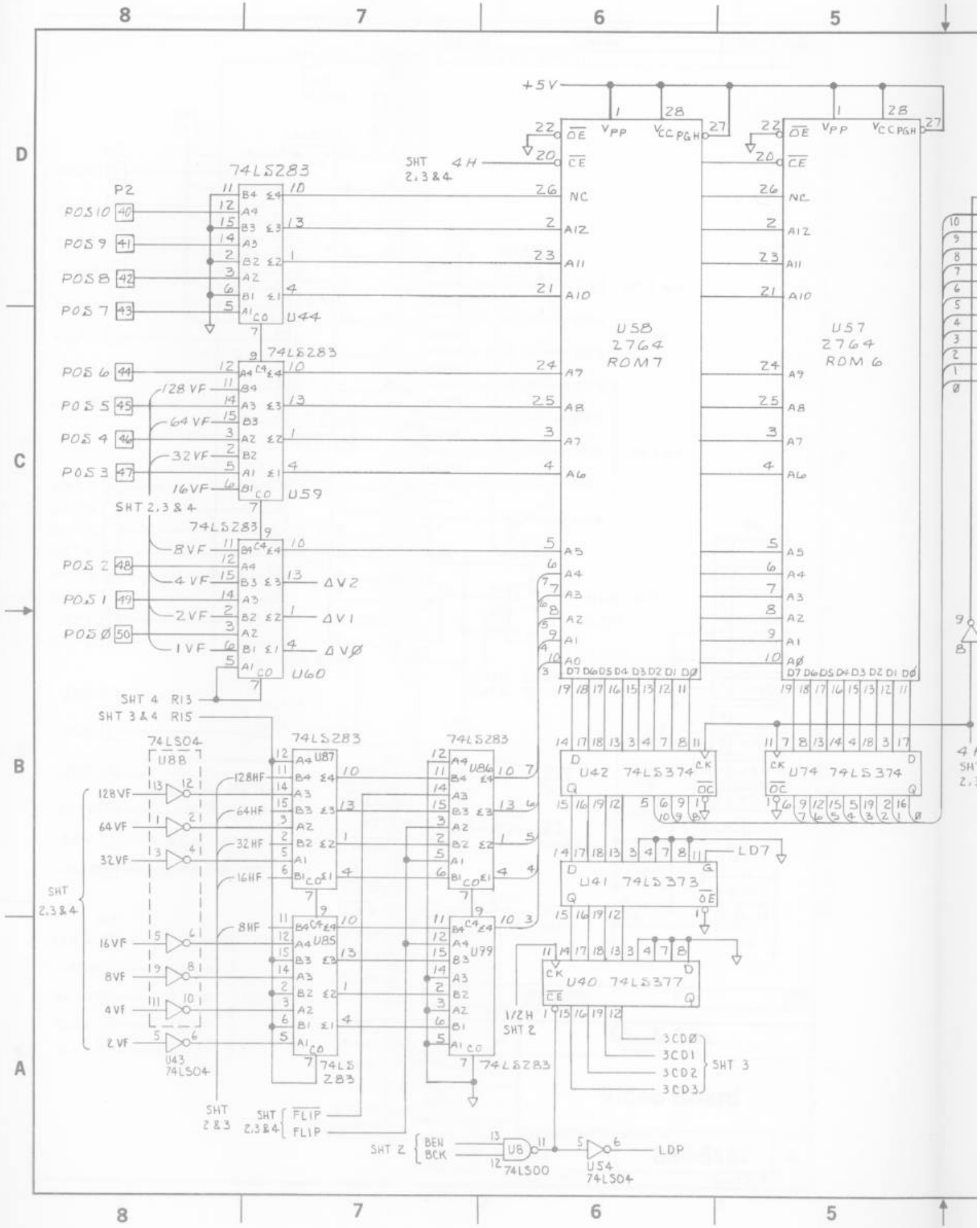
8
7
6
5
D
C
B
A
+5V
74LS283
P2
POS 10
POS 9
POS 8
POS 7
POS 6
POS 5
POS 4
POS 3
POS 2
POS 1
POS Ø
U44
U59
U60
128 VF
64 VF
32 VF
16 VF
8 VF
4 VF
2 VF
1 VF
SHT 2,3 & 4
SHT 4 R13
SHT 3 & 4 R15
ΔV2
ΔV1
ΔVØ
74LS04
U88
U43
74LS04
128HF
64HF
32HF
16HF
8HF
4HF
U87
U86
U85
U79
74LS283
SHT 4H
SHT 2,3&4
U58
2764
ROM 7
U57
2764
ROM 6
U42 74LS374
U74 74LS374
U41 74LS373
U40 74LS377
LD7
1/2H
SHT 2
3CDØ
3CD1
3CD2
3CD3
SHT 3
SHT 2&3
FLIP
SHT 2,3&4
SHT 2
BEN
BCK
U8
74LS00
U54
74LS04
LDP

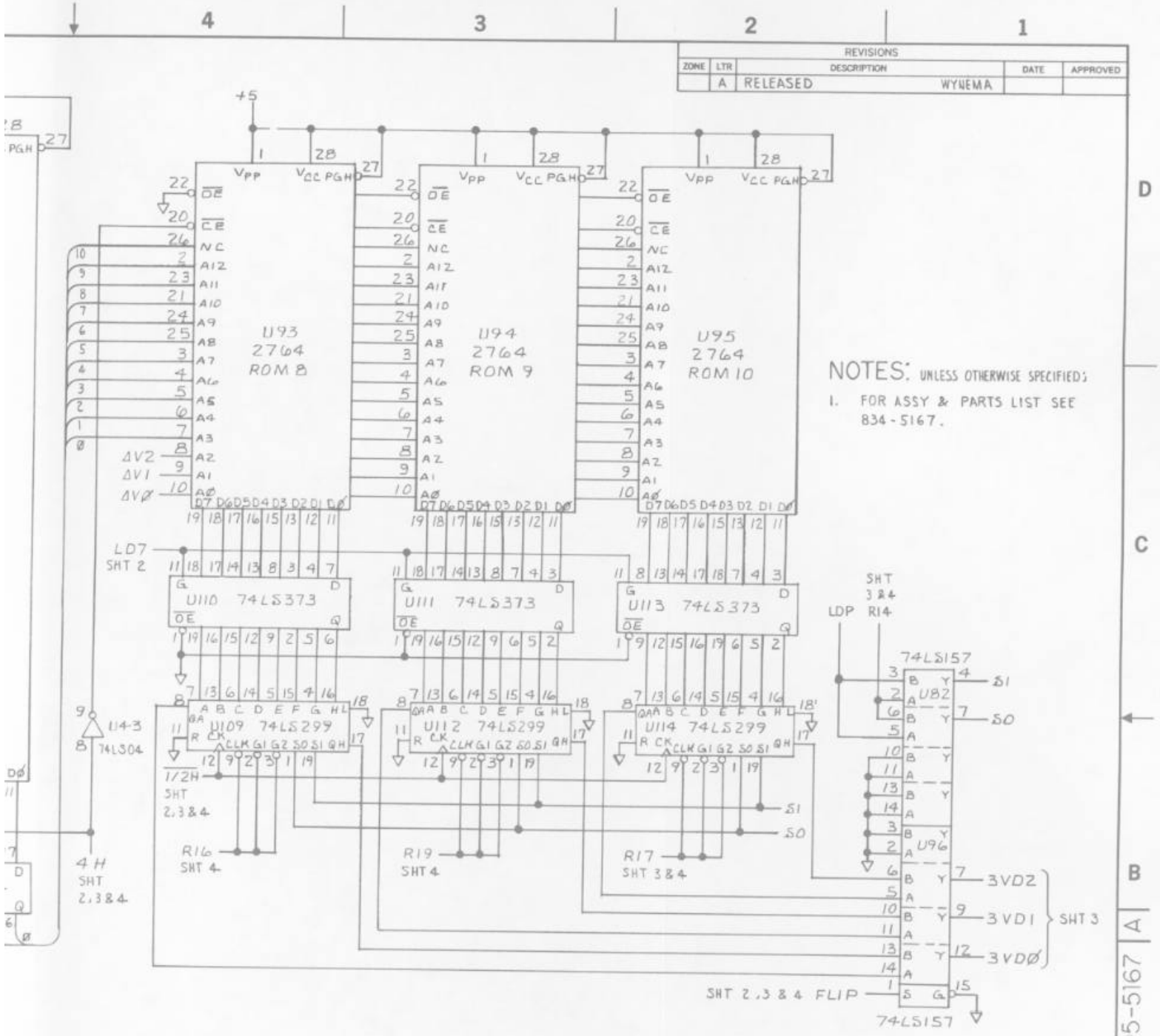

QTY REQD	CODE IDENT	PART OR IDENTIFYING NO.	NOMENCLATURE OR DESCRIPTION	ITEM NO.

PARTS LIST

UNLESS OTHERWISE SPECIFIED DIMENSIONS ARE IN INCHES
TOLERANCES ARE:
FRACTIONS ± | DECIMALS .XX ± .XXX ± | ANGLES ±

MATERIAL

FINISH

NEXT ASSY | USED ON

APPLICATION

DO NOT SCALE DRAWING

CONTRACT NO.

APPROVALS	DATE
DRAWN Wynema	4-8-83
CHECKED	5-2-83
MECH	
ELEC	
MFG	
PROJECT	

Gremlin/SEGA
San Diego, California 92123

Video Board

SIZE	CODE IDENT NO.	DRAWING NO.	REV
D		834-5167	A

SCALE NONE | SHEET / OF

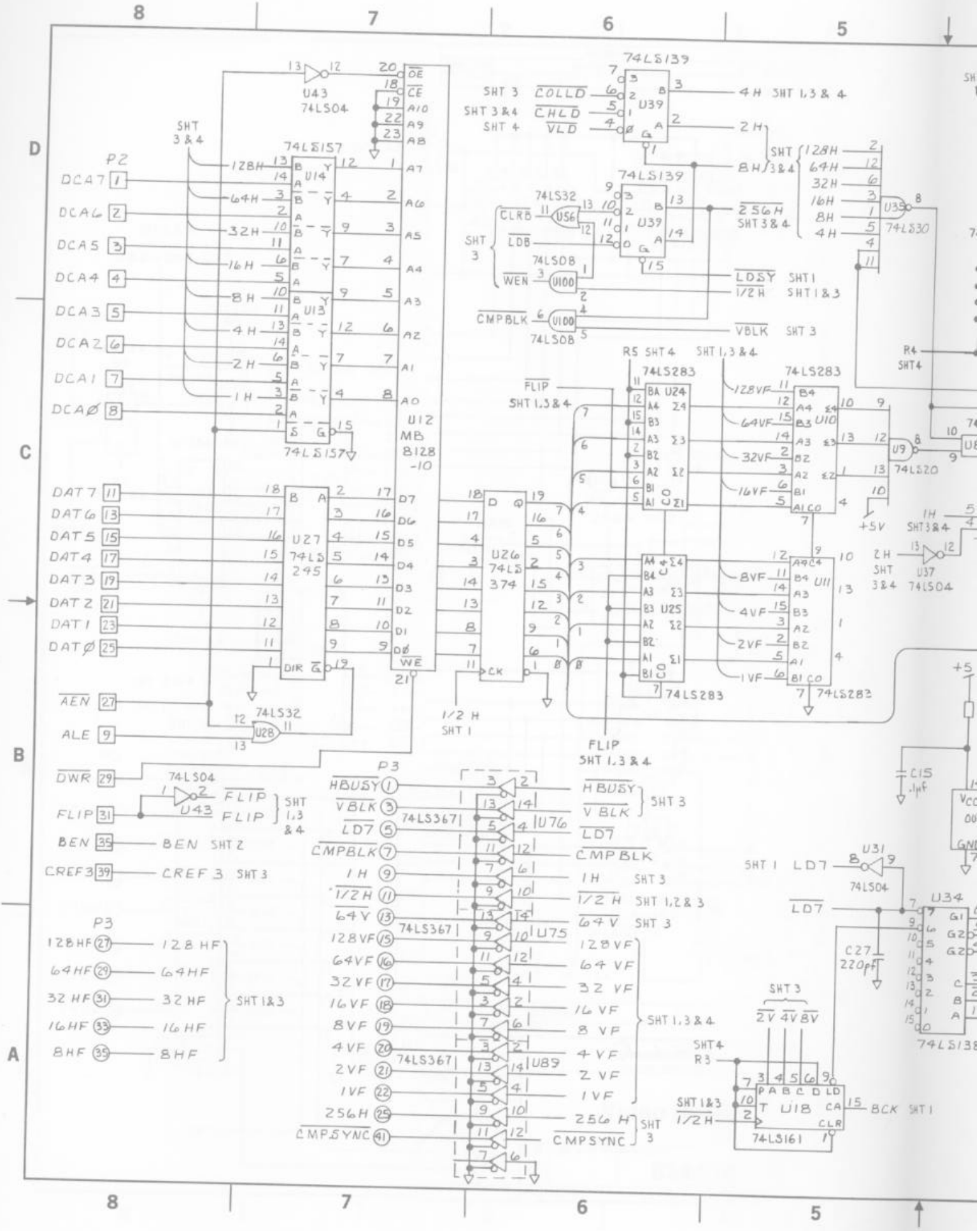

8
7
6
5
D
C
B
A
P2
DCA7
DCA6
DCA5
DCA4
DCA3
DCA2
DCA1
DCAØ
DAT7
DAT6
DAT5
DAT4
DAT3
DAT2
DAT1
DATØ
AEN
ALE
DWR
FLIP
BEN
CREF3
U43
74LS04
74LS157
U14
U13
U12
MB
8128
-10
U27
74LS
245
U26
74LS
374
74LS32
U28
74LS139
U39
74LS32
U56
74LS08
U100
74LS283
U24
U25
U10
U11
74LS30
U35
74LS20
U9
U37
74LS04
+5V
R5 SHT 4
SHT 1,3 & 4
FLIP
SHT 1,3 & 4
1/2 H
SHT 1
4H SHT 1,3 & 4
2H
8H
256H
SHT 3 & 4
LDSY SHT 1
1/2H SHT 1 & 3
VBLK SHT 3
R4
SHT 4
C15
.1µf
P3
HBUSY
VBLK
LD7
CMPBLK
1H
1/2H
64V
128VF
64VF
32VF
16VF
8VF
4VF
2VF
1VF
256H
CMPSYNC
74LS367
U76
U75
U89
SHT 3
SHT 1,2 & 3
SHT 1,3 & 4
SHT 1 LD7
U31
74LS04
U34
74LS138
C27
220pf
SHT 3
2V 4V 8V
SHT 4
R3
SHT 1&3
1/2H
U18
74LS161
BCK SHT 1
128HF
64HF
32HF
16HF
8HF
SHT 1&3

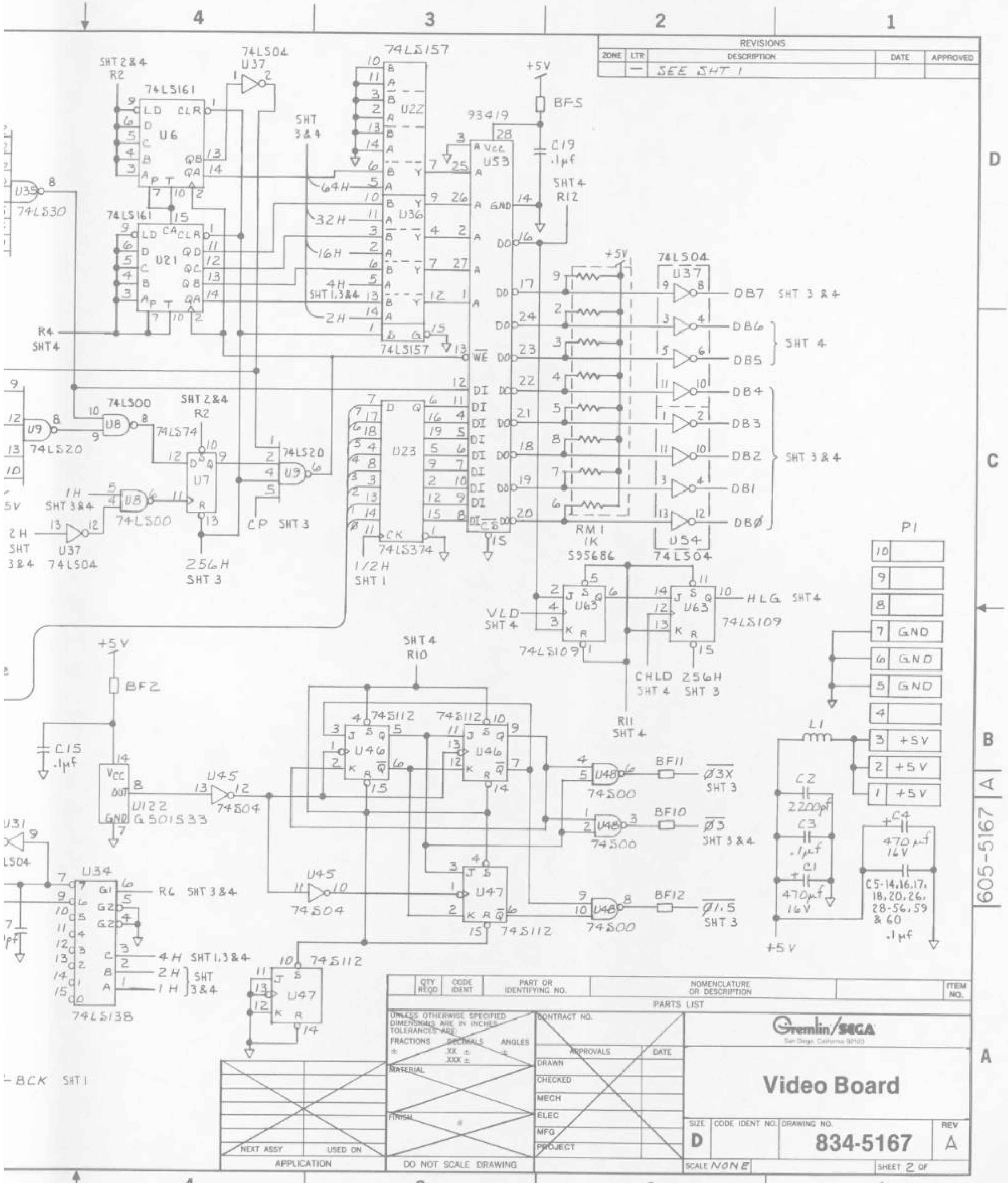
REVISIONS
ZONE | LTR | DESCRIPTION | DATE | APPROVED
— SEE SHT 1
74LS161
U6
74LS161
U21
74LS04
U37
74LS157
U22
U36
93419
U53
+5V
BF5
C19
.1μf
SHT 4
R12
RM1
1K
595686
74LS04
U37
U54
DB7 SHT 3 & 4
DB6
DB5
SHT 4
DB4
DB3
DB2
DB1
DBØ
SHT 3 & 4
74LS30
74LS20
74LS00
U8
74LS74
U7
U9
CP SHT 3
256H SHT 3
74LS374
U23
1/2H SHT 1
U63
74LS109
VLD SHT 4
HLG SHT4
CHLD SHT 4
256H SHT 3
R11 SHT 4
P1
GND
+5V
L1
C2 2200pf
C3 .1μf
C1 470μf 16V
C4 470μf 16V
C5-14,16,17, 18,20,26, 28-56,59 & 60 .1μf
BF2
C15 .1μf
U122
G501533
U45
74S04
SHT 4
R10
74S112
U46
U47
U48
74S00
BF11
Ø3X SHT 3
BF10
Ø3 SHT 3 & 4
BF12
Ø1.5 SHT 3
U34
74LS138
R6 SHT 3 & 4
4H SHT 1,3 & 4
2H
1H
SHT 3 & 4
BCK SHT 1
605-5167 A
QTY REQD | CODE IDENT | PART OR IDENTIFYING NO. | NOMENCLATURE OR DESCRIPTION | ITEM NO.
PARTS LIST
UNLESS OTHERWISE SPECIFIED DIMENSIONS ARE IN INCHES TOLERANCES ARE:
FRACTIONS ± DECIMALS .XX ± .XXX ± ANGLES ±
MATERIAL
FINISH
CONTRACT NO.
APPROVALS DATE
DRAWN
CHECKED
MECH
ELEC
MFG
PROJECT
NEXT ASSY USED ON
APPLICATION
DO NOT SCALE DRAWING
Gremlin/SEGA
San Diego, California 92120
Video Board
SIZE D
CODE IDENT NO.
DRAWING NO. 834-5167
REV A
SCALE NONE
SHEET 2 OF

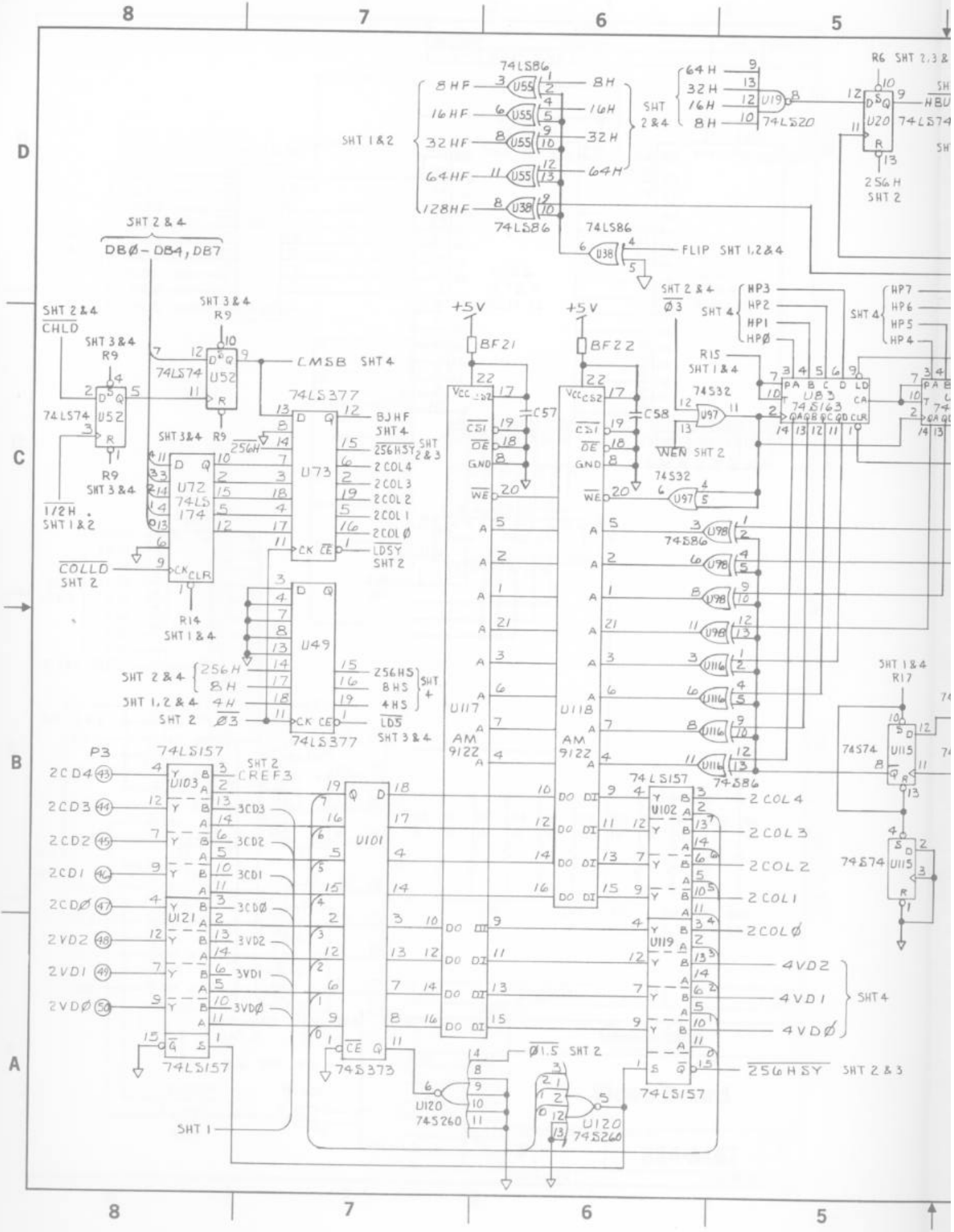

8
7
6
5
D
C
B
A
74LS86
8HF
16HF
32HF
64HF
128HF
8H
16H
32H
64H
SHT 1&2
SHT 2&4
64H
32H
16H
8H
74LS20
R6 SHT 2,3 &
U20
74LS74
256H
SHT 2
FLIP SHT 1,2&4
SHT 2&4
DBØ-DB4, DB7
SHT 2&4
CHLD
SHT 3&4
R9
74LS74
U52
CMSB SHT 4
74LS377
BJHF
SHT 4
256HSY
SHT 2&3
2COL4
2COL3
2COL2
2COL1
2COLØ
LDSY
SHT 2
U72
74LS174
1/2H
SHT 1&2
COLLD
SHT 2
R14
SHT 1&4
U49
256HS
8HS
4HS
LD5
SHT 3&4
SHT 2&4
256H
8H
SHT 1,2&4
4H
SHT 2
Ø3
+5V
BF21
BF22
C57
C58
U117
AM 9122
U118
AM 9122
SHT 2&4
Ø3
SHT 4
HP3
HP2
HP1
HPØ
HP7
HP6
HP5
HP4
R15
SHT 1&4
74S32
U97
U83
74S163
WEN SHT 2
74S86
U98
U116
SHT 1&4
R17
74S74
U115
P3
74LS157
U103
SHT 2
CREF3
2CD4
2CD3
2CD2
2CD1
2CDØ
2VD2
2VD1
2VDØ
3CD3
3CD2
3CD1
3CDØ
3VD2
3VD1
3VDØ
U121
U101
74S373
U102
U119
2COL4
2COL3
2COL2
2COL1
2COLØ
4VD2
4VD1
4VDØ
SHT 4
Ø1.5 SHT 2
256HSY SHT 2&3
U120
74S260
SHT 1

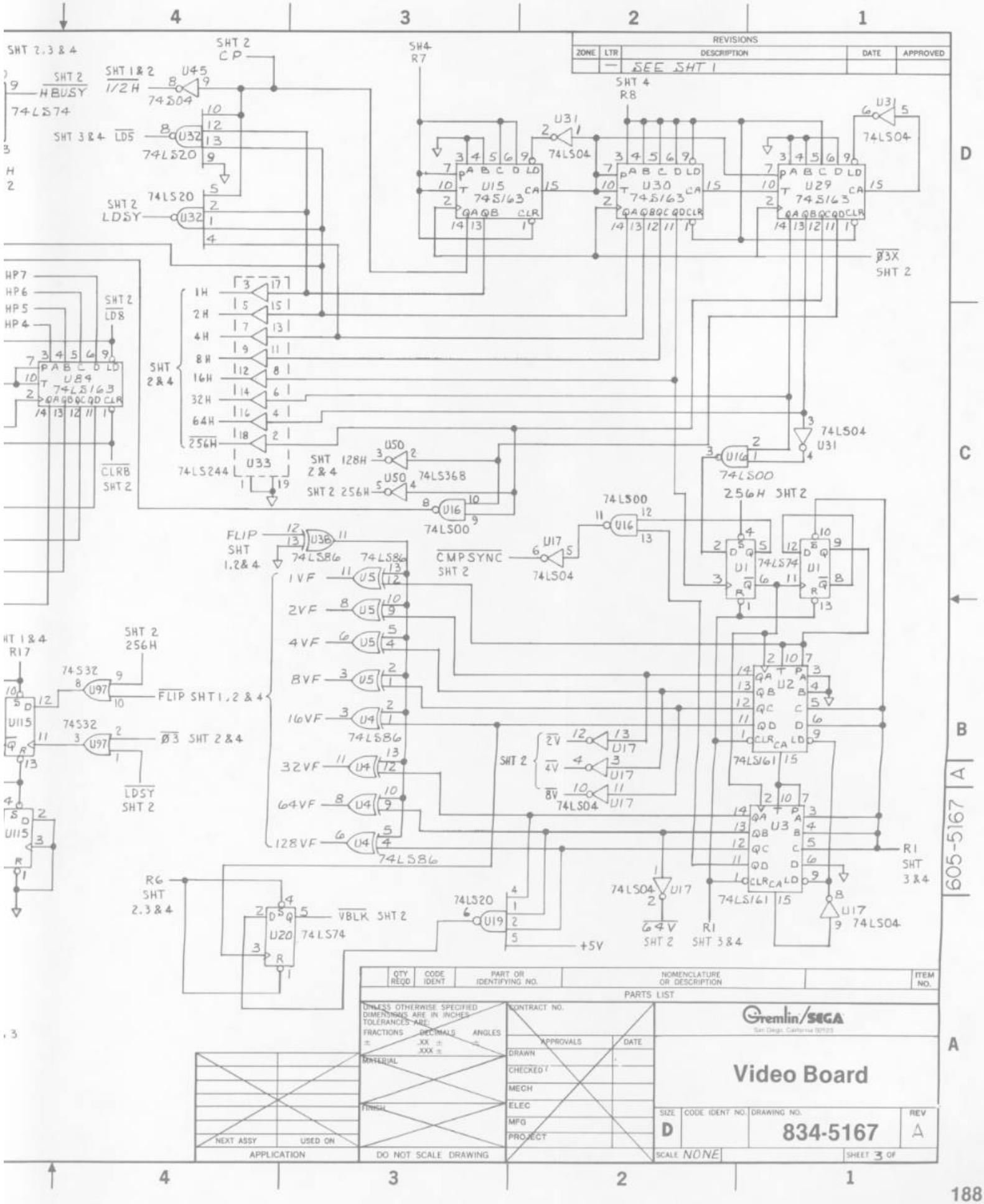
REVISIONS
ZONE LTR DESCRIPTION DATE APPROVED
— SEE SHT 1
SHT 2,3 & 4
SHT 2 HBUSY
74LS74
SHT 1 & 2 1/2H
U45
74S04
SHT 2 CP
SHT 3 & 4 LD5
U32
74LS20
SHT 2 LDSY
SH4 R7
SHT 4 R8
U31
74LS04
U15 74S163
U30 74S163
U29 74S163
Ø3X SHT 2
HP7
HP6
HP5
HP4
SHT 2 LD8
U84 74LS163
CLRB SHT 2
SHT 2 & 4
1H
2H
4H
8H
16H
32H
64H
256H
U33
74LS244
SHT 128H
SHT 2 256H
U50
74LS368
U16
74LS00
256H SHT 2
U1
74LS74
FLIP SHT 1,2 & 4
U38
74LS86
CMPSYNC SHT 2
U17
1VF
2VF
4VF
8VF
16VF
32VF
64VF
128VF
U5
U4
SHT 2
2V
4V
8V
U2
74LS161
U3
R1 SHT 3 & 4
SHT 1 & 4 R17
SHT 2 256H
74S32
U97
FLIP SHT 1,2 & 4
U115
Ø3 SHT 2 & 4
LDSY SHT 2
R6 SHT 2,3 & 4
U20
VBLK SHT 2
U19
+5V
64V SHT 2
R1 SHT 3 & 4
605-5167 A
QTY REQD
CODE IDENT
PART OR IDENTIFYING NO.
NOMENCLATURE OR DESCRIPTION
ITEM NO.
PARTS LIST
UNLESS OTHERWISE SPECIFIED DIMENSIONS ARE IN INCHES TOLERANCES ARE:
FRACTIONS ± DECIMALS .XX ± .XXX ± ANGLES ±
MATERIAL
FINISH
CONTRACT NO.
APPROVALS DATE
DRAWN
CHECKED
MECH
ELEC
MFG
PROJECT
Gremlin/SEGA
San Diego, California 92123
Video Board
SIZE D
CODE IDENT NO.
DRAWING NO. 834-5167
REV A
SCALE NONE
SHEET 3 OF
NEXT ASSY
USED ON
APPLICATION
DO NOT SCALE DRAWING

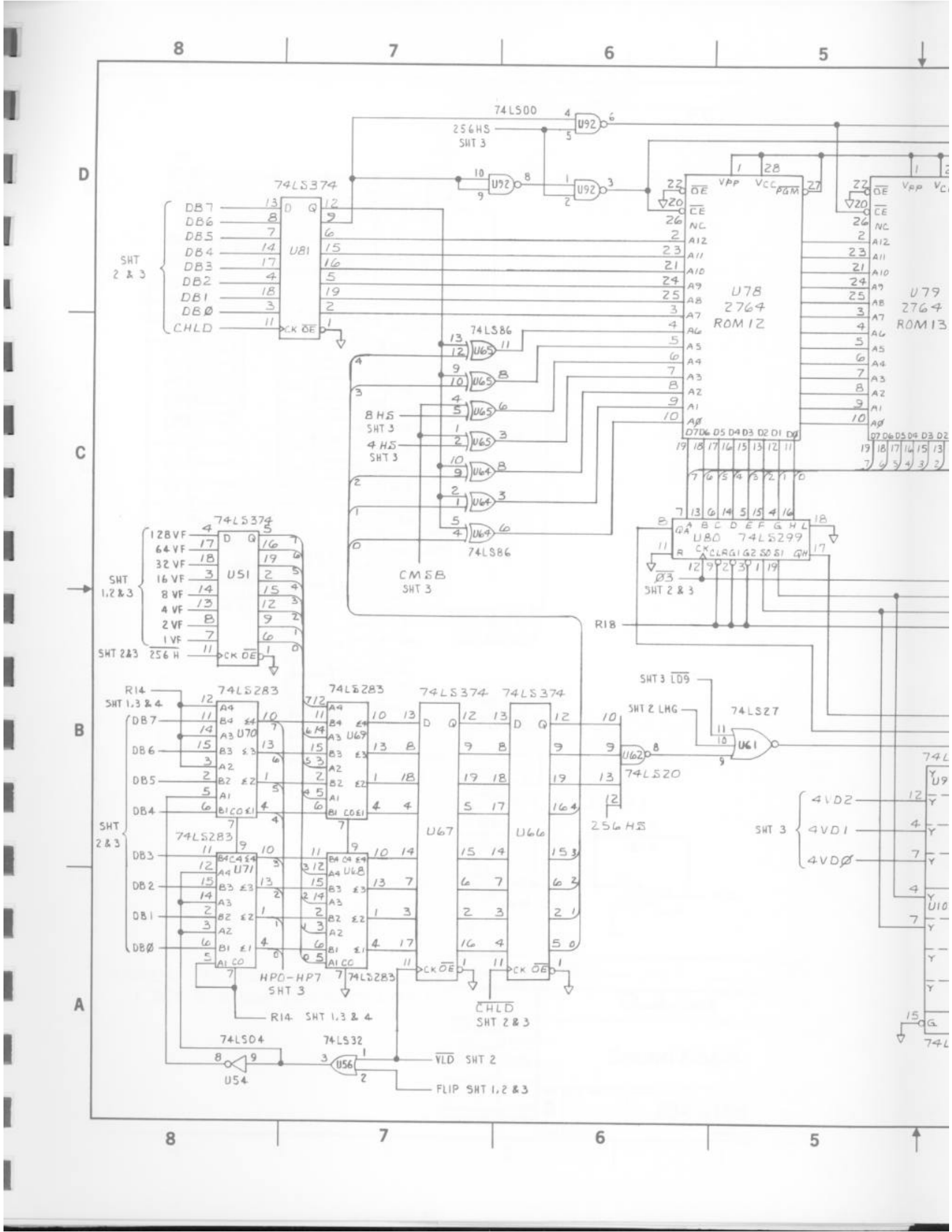
74LS00
256HS SHT 3
U92
74LS374
U81
DB7
DB6
DB5
DB4
DB3
DB2
DB1
DB0
CHLD
SHT 2 & 3
U78 2764 ROM 12
U79 2764 ROM 13
74LS86
U65
U64
8HS SHT 3
4HS SHT 3
CMSB SHT 3
74LS374
U51
128VF
64VF
32VF
16VF
8VF
4VF
2VF
1VF
SHT 1,2 & 3
SHT 2&3 256H
U80 74LS299
Ø3 SHT 2 & 3
R18
74LS283
U70
U69
U71
U68
R14 SHT 1,3 & 4
HP0-HP7 SHT 3
74LS374
U67
U66
SHT 3 LD9
SHT 2 LMG
74LS27
U61
U62
74LS20
256HS
4VD2
4VD1
4VDØ
SHT 3
CHLD SHT 2 & 3
74LS04
U54
74LS32
U56
VLD SHT 2
FLIP SHT 1,2 & 3

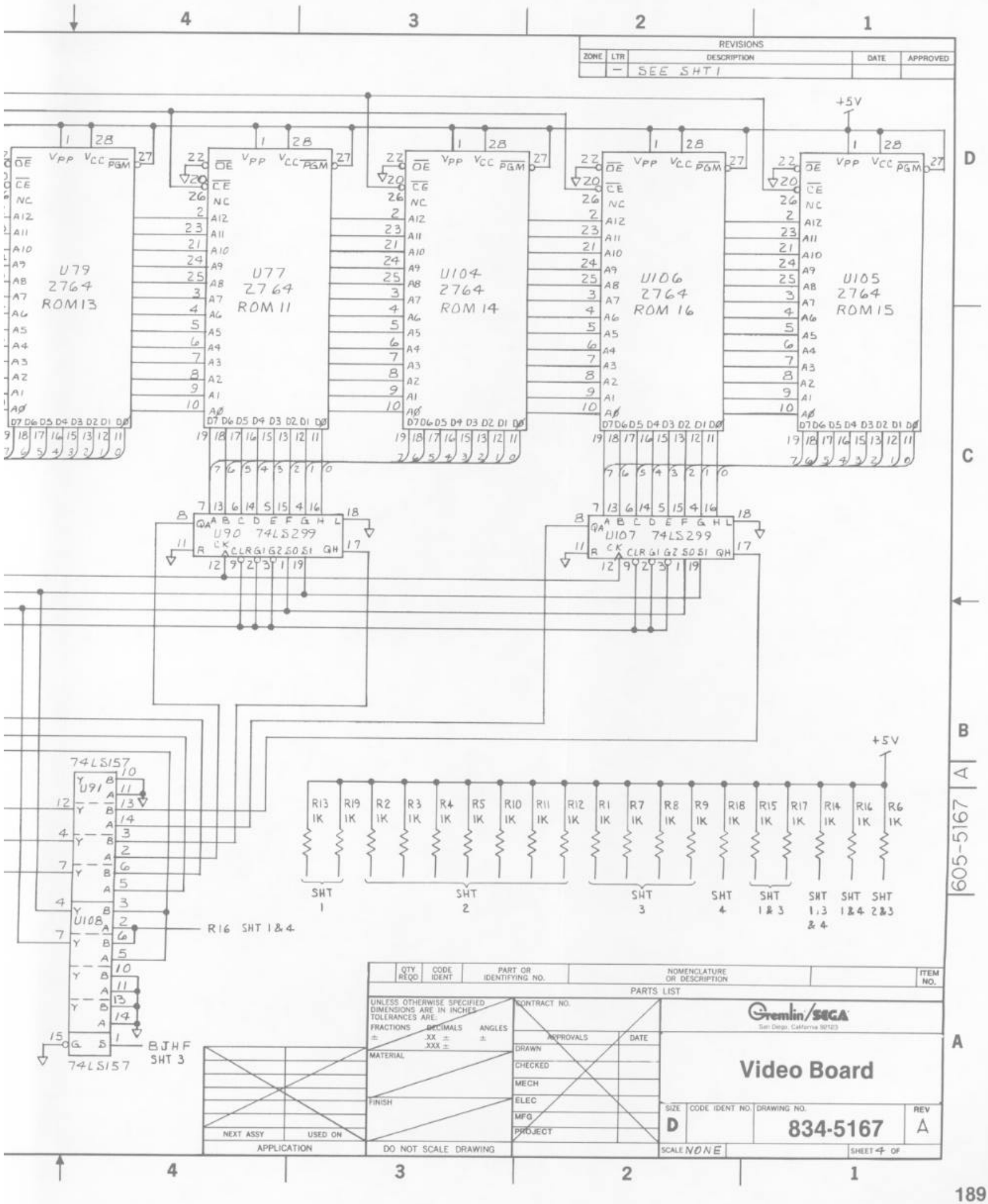
REVISIONS
ZONE | LTR | DESCRIPTION | DATE | APPROVED
— SEE SHT 1
+5V
U79 2764 ROM13
U77 2764 ROM 11
U104 2764 ROM 14
U106 2764 ROM 16
U105 2764 ROM 15
U90 74LS299
U107 74LS299
74LS157
U91
U108
R16 SHT 1&4
BJHF SHT 3
R13 1K
R19 1K
R2 1K
R3 1K
R4 1K
R5 1K
R10 1K
R11 1K
R12 1K
R1 1K
R7 1K
R8 1K
R9 1K
R18 1K
R15 1K
R17 1K
R14 1K
R16 1K
R6 1K
SHT 1
SHT 2
SHT 3
SHT 4
SHT 1&3
SHT 1,3 & 4
SHT 1&4
SHT 2&3
PARTS LIST
QTY REQD | CODE IDENT | PART OR IDENTIFYING NO. | NOMENCLATURE OR DESCRIPTION | ITEM NO.
UNLESS OTHERWISE SPECIFIED DIMENSIONS ARE IN INCHES TOLERANCES ARE:
FRACTIONS ± DECIMALS .XX ± .XXX ± ANGLES ±
MATERIAL
FINISH
NEXT ASSY | USED ON
APPLICATION
DO NOT SCALE DRAWING
CONTRACT NO.
APPROVALS | DATE
DRAWN
CHECKED
MECH
ELEC
MFG
PROJECT
Gremlin/SEGA
San Diego, California 92123
Video Board
SIZE D | CODE IDENT NO. | DRAWING NO. 834-5167 | REV A
SCALE NONE | SHEET 4 OF
605-5167 A

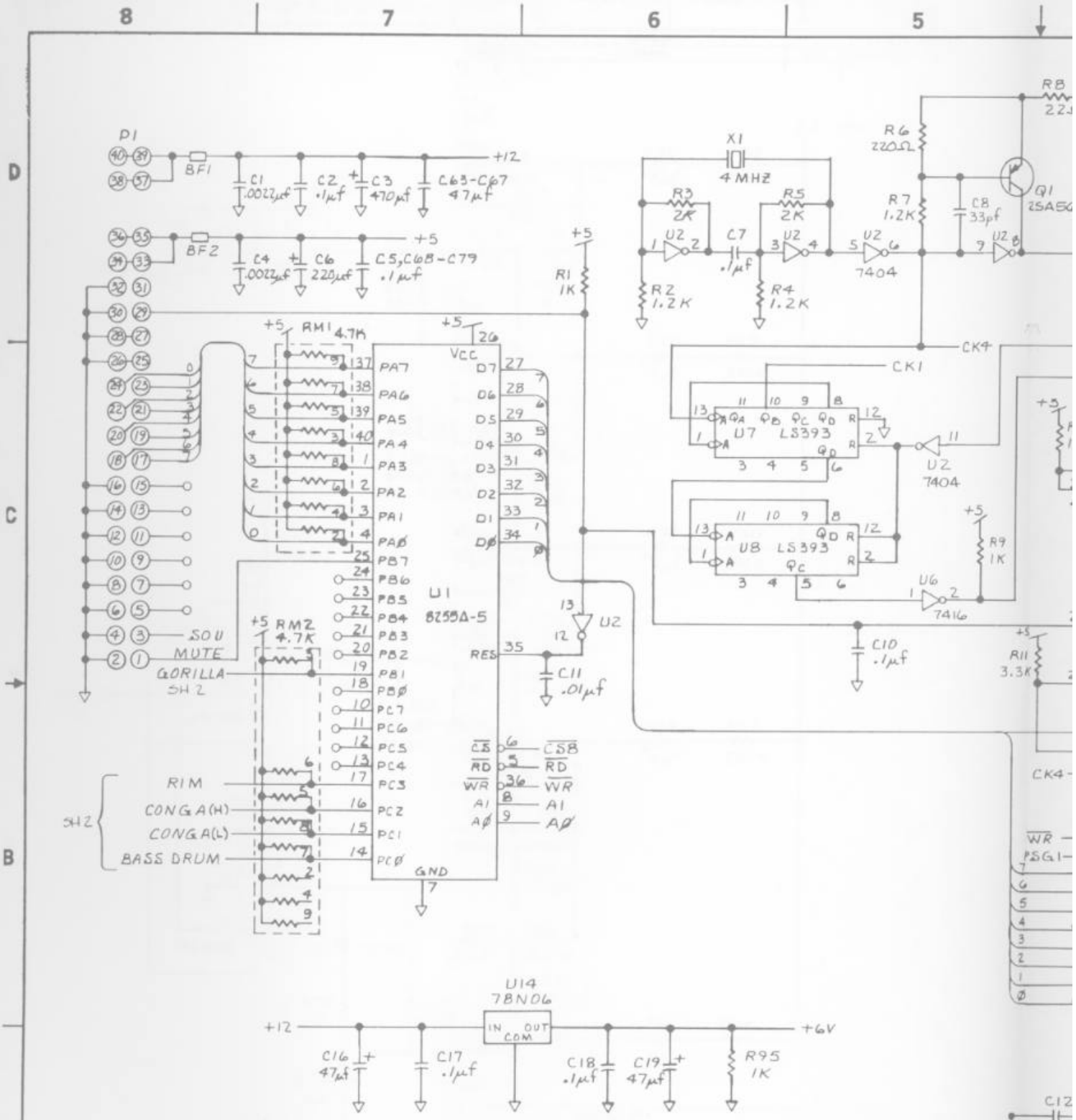

NOTES: UNLESS OTHERWISE SPECIFIED

1. SEE 834-5168 FOR PARTS LIST AND ASSY.

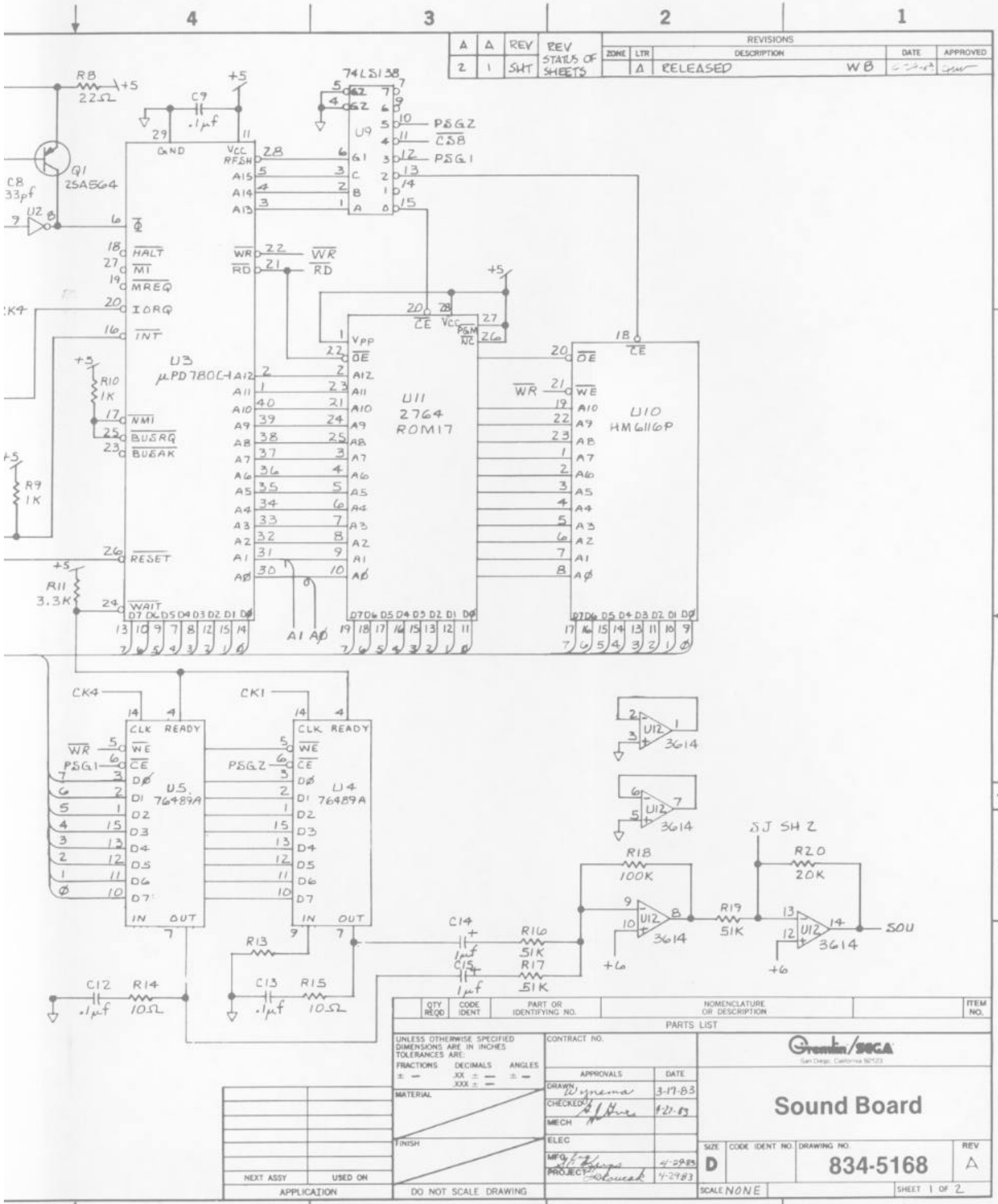

REVISIONS
ZONE LTR DESCRIPTION DATE APPROVED
A RELEASED WB
REV STATUS OF SHEETS
74LS138
U9
PSG2
CS8
PSG1
U3
μPD780C-1
U11
2764
ROM17
U10
HM6116P
Q1
2SA564
R8 22Ω
C9 .1μf
C8 33pf
R10 1K
R9 1K
R11 3.3K
CK4
CK1
U5
76489A
U4
76489A
U12
3614
R18 100K
R19 51K
R20 20K
SJ SH 2
SOU
C14 1μf
C15 1μf
R16 51K
R17 51K
R13
C12 .1μf
R14 10Ω
C13 .1μf
R15 10Ω
QTY REQD
CODE IDENT
PART OR IDENTIFYING NO.
NOMENCLATURE OR DESCRIPTION
ITEM NO.
PARTS LIST
UNLESS OTHERWISE SPECIFIED DIMENSIONS ARE IN INCHES TOLERANCES ARE:
FRACTIONS ± —
DECIMALS .XX ± — .XXX ± —
ANGLES ± —
MATERIAL
FINISH
CONTRACT NO.
APPROVALS DATE
DRAWN 3-17-83
CHECKED 4-27-83
MECH
ELEC
MFG 4-29-83
PROJECT 4-29-83
Gremlin/SEGA
San Diego, California 92123
Sound Board
SIZE D
CODE IDENT NO.
DRAWING NO. 834-5168
REV A
SCALE NONE
SHEET 1 OF 2
NEXT ASSY
USED ON
APPLICATION
DO NOT SCALE DRAWING
605-5168

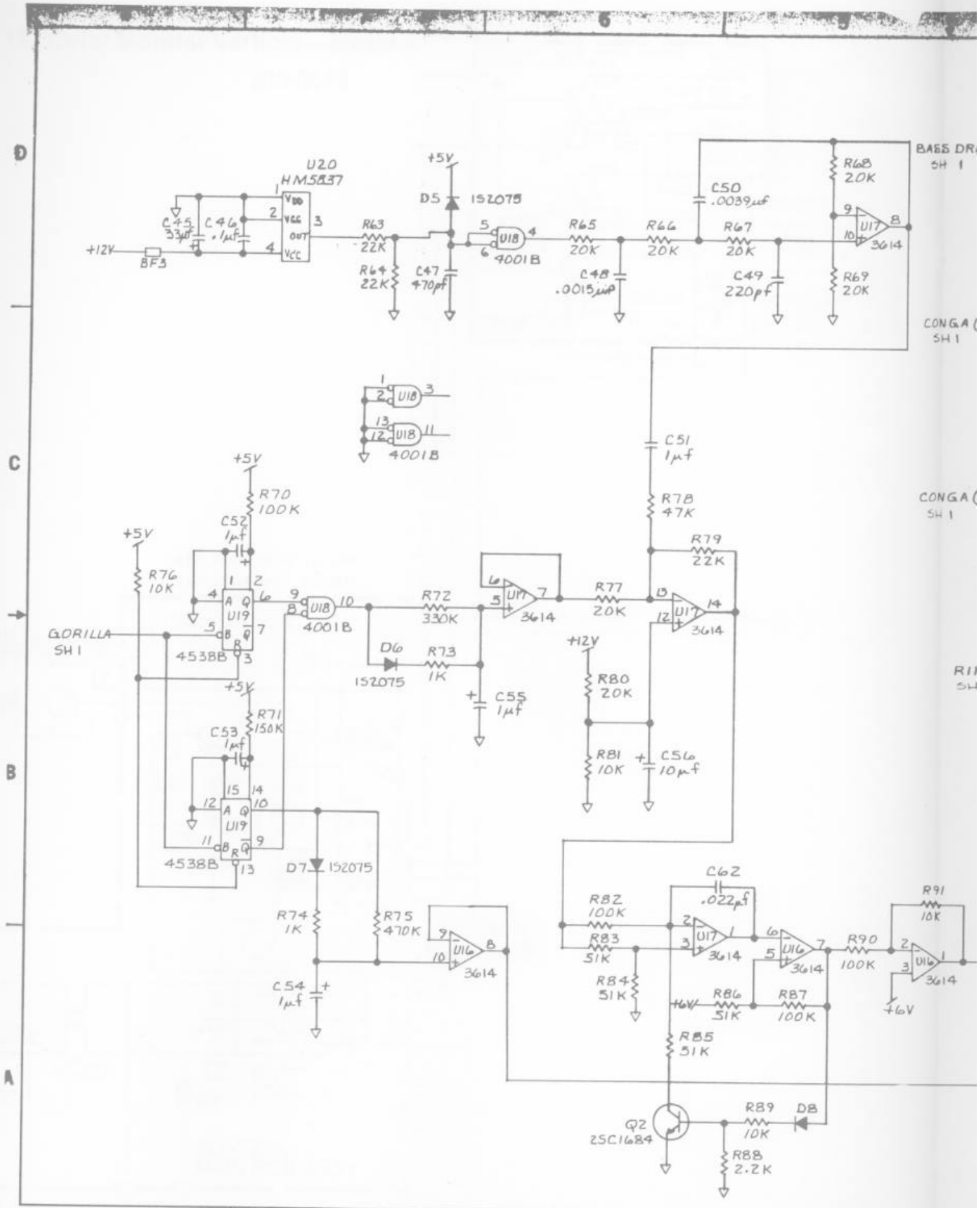
U20
HM5837
C45
33µf
C46
.1µf
+12V
BF3
R63
22K
D5
152075
+5V
U18
4001B
R64
22K
C47
470pf
R65
20K
R66
20K
C48
.0015µf
C50
.0039µf
R67
20K
C49
220pf
R68
20K
R69
20K
U17
3614
BASS DR
SH 1
CONGA
SH 1
C51
1µf
R78
47K
R79
22K
R70
100K
C52
1µf
R76
10K
U19
4538B
GORILLA
SH 1
R72
330K
R77
20K
D6
152075
R73
1K
C55
1µf
R80
20K
R81
10K
C56
10µf
R71
150K
C53
1µf
D7
152075
R74
1K
R75
470K
C54
1µf
U16
3614
C62
.022µf
R82
100K
R83
51K
R84
51K
R85
51K
R86
51K
R87
100K
R90
100K
R91
10K
+6V
Q2
2SC1684
R89
10K
D8
R88
2.2K

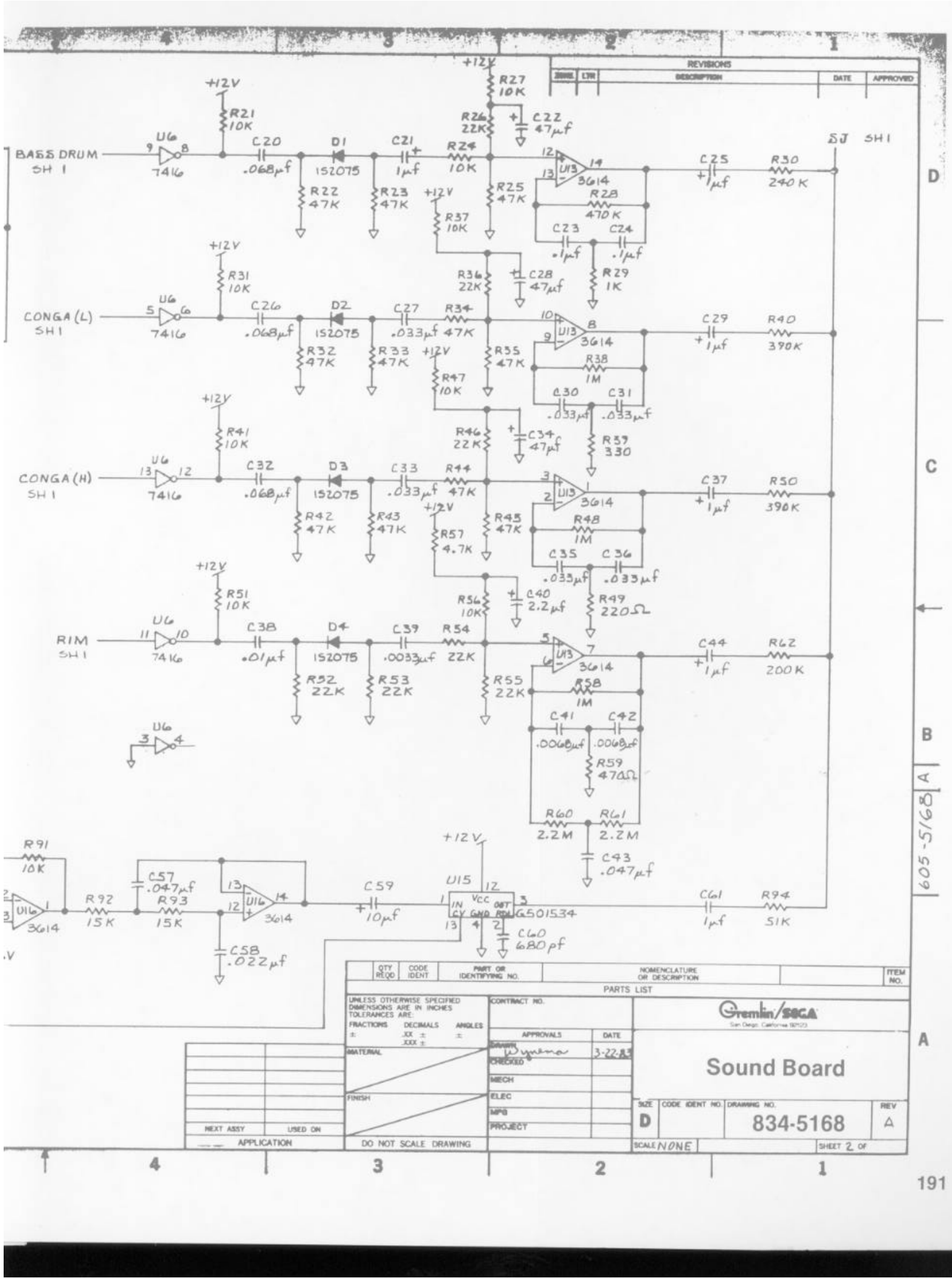
REVISIONS
ZONE
LTR
DESCRIPTION
DATE
APPROVED
BASS DRUM SH 1
CONGA (L) SH 1
CONGA (H) SH 1
RIM SH 1
SJ SH 1
+12V
U6
7416
U13
3614
U15
G501534
U16
R21 10K
R22 47K
R23 47K
R24 10K
R25 47K
R26 22K
R27 10K
R28 470K
R29 1K
R30 240K
R31 10K
R32 47K
R33 47K
R34 47K
R35 47K
R36 22K
R37 10K
R38 1M
R40 390K
R41 10K
R42 47K
R43 47K
R44 47K
R45 47K
R46 22K
R47 10K
R48 1M
R49 220Ω
R50 390K
R51 10K
R52 22K
R53 22K
R54 22K
R55 22K
R56 10K
R57 4.7K
R58 1M
R59 470Ω
R60 2.2M
R61 2.2M
R62 200K
R91 10K
R92 15K
R93 15K
R94 51K
C20 .068μf
C21 1μf
C22 47μf
C23 .1μf
C24 .1μf
C25 1μf
C26 .068μf
C27 .033μf
C28 47μf
C29 1μf
C30 .033μf
C31 .033μf
C32 .068μf
C33 .033μf
C34 47μf
C35 .033μf
C36 .033μf
C37 1μf
C38 .01μf
C39 .0033μf
C40 2.2μf
C41 .0068μf
C42 .0068μf
C43 .047μf
C44 1μf
C57 .047μf
C58 .022μf
C59 10μf
C60 680pf
C61 1μf
D1 1S2075
D2 1S2075
D3 1S2075
D4 1S2075
605-5168 A
PARTS LIST
QTY REQD
CODE IDENT
PART OR IDENTIFYING NO.
NOMENCLATURE OR DESCRIPTION
ITEM NO.
UNLESS OTHERWISE SPECIFIED DIMENSIONS ARE IN INCHES TOLERANCES ARE:
FRACTIONS
DECIMALS
ANGLES
CONTRACT NO.
APPROVALS
DATE
DRAWN
CHECKED
MECH
ELEC
MFG
PROJECT
MATERIAL
FINISH
NEXT ASSY
USED ON
APPLICATION
DO NOT SCALE DRAWING
Gremlin/SEGA
Sound Board
SIZE
CODE IDENT NO.
DRAWING NO.
REV
D
834-5168
A
SCALE NONE
SHEET 2 OF

19" Color Monitor Vertical—Electrohome G07-907

200-0019

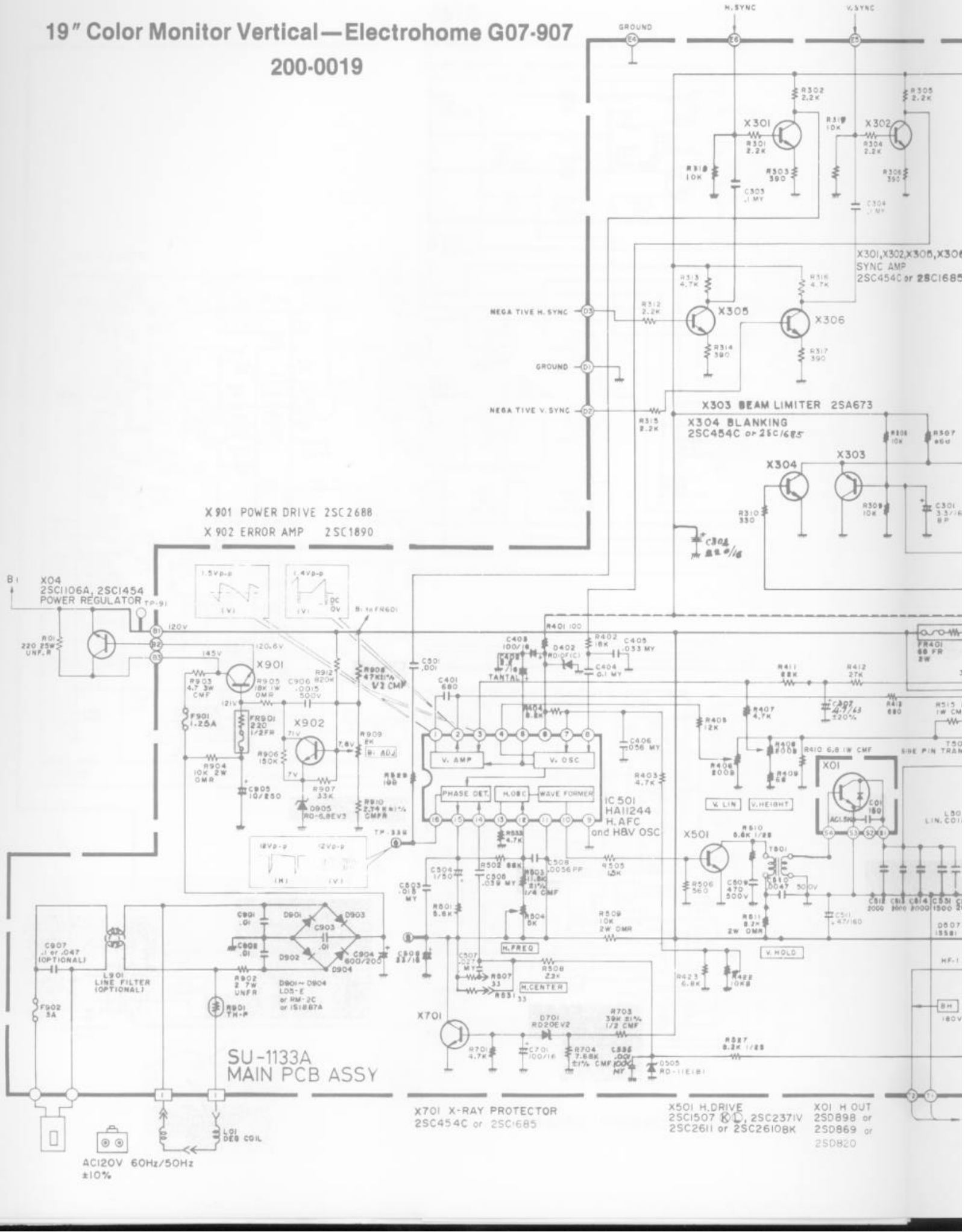

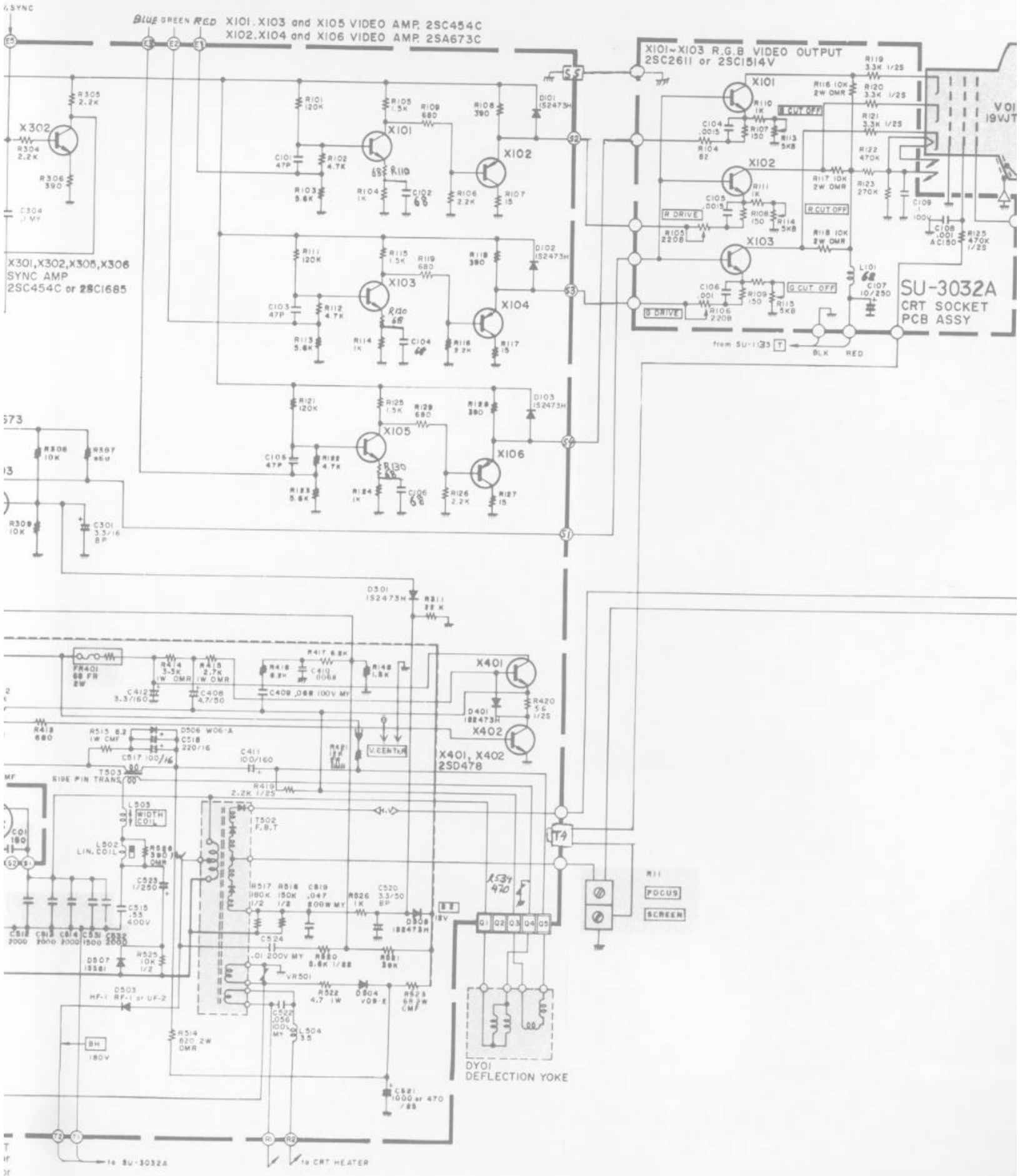
BLUE GREEN RED X101, X103 and X105 VIDEO AMP. 2SC454C
X102, X104 and X106 VIDEO AMP. 2SA673C
X101~X103 R.G.B VIDEO OUTPUT
2SC2611 or 2SC1514V
X301, X302, X305, X306
SYNC AMP
2SC454C or 2SC1685
SU-3032A
CRT SOCKET
PCB ASSY
X401, X402
2SD478
DY01
DEFLECTION YOKE
FOCUS
SCREEN
to SU-3032A
to CRT HEATER

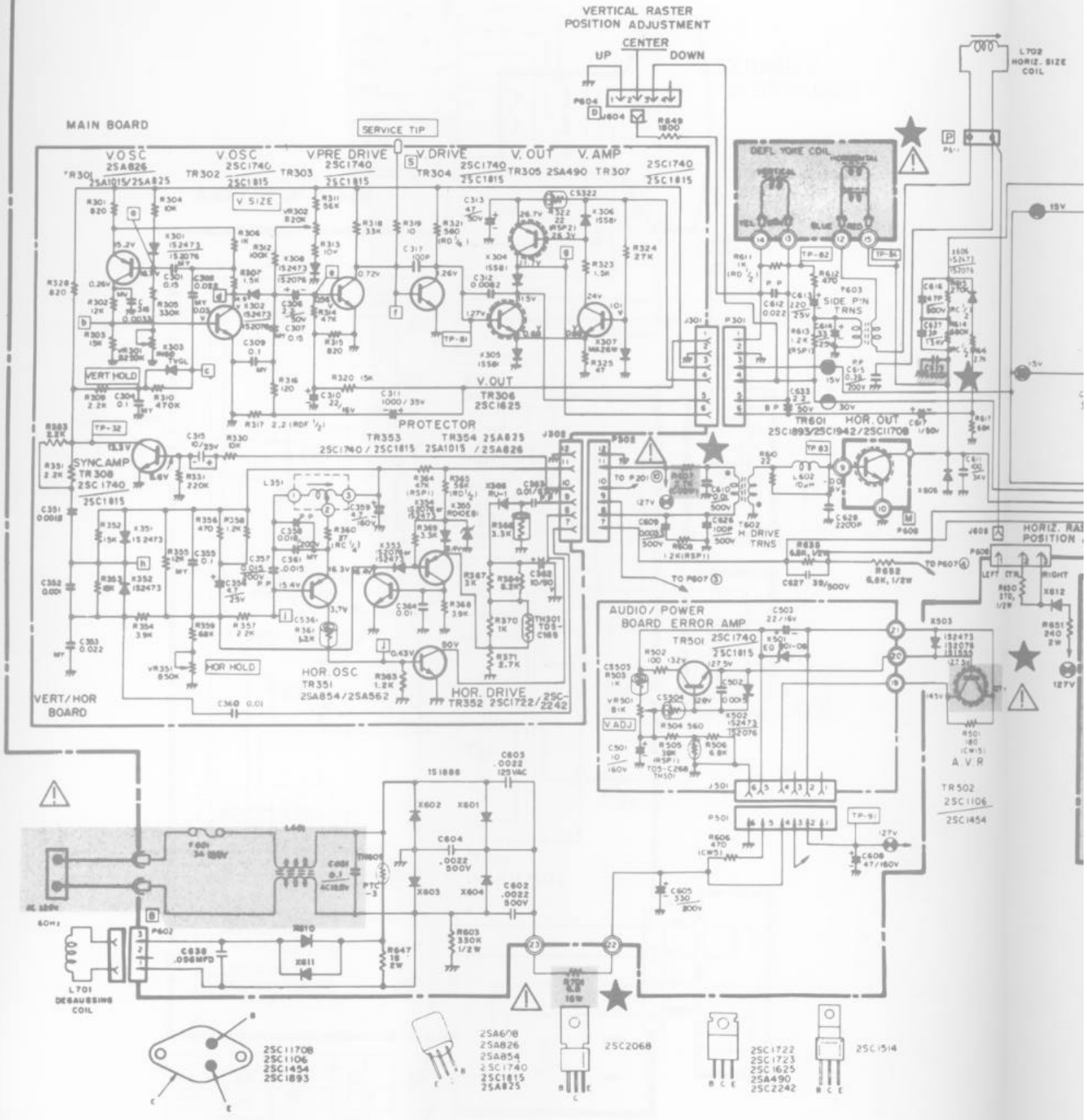
VERTICAL RASTER POSITION ADJUSTMENT
CENTER
UP
DOWN
MAIN BOARD
SERVICE TIP
V.OSC
V.OSC
V.PRE DRIVE
V.DRIVE
V. OUT
V. AMP
V SIZE
VERT HOLD
V.OUT
TR306 2SC1625
PROTECTOR
SYNC.AMP
TR308 2SC1740
2SC1815
HOR HOLD
HOR. OSC
TR351 2SA854/2SA562
HOR. DRIVE
TR352 2SC1722/2SC2242
VERT/HOR BOARD
DEFL YOKE COIL
SIDE PIN TRNS
TR601 HOR. OUT
2SC1893/2SC1942/2SC1708
H. DRIVE TRNS
L702 HORIZ. SIZE COIL
HORIZ. RA... POSITION
AUDIO/ POWER BOARD ERROR AMP
TR501 2SC1740
2SC1815
V.ADJ
A.V.R
TR502 2SC1106
2SC1454
L701 DEGAUSSING COIL
60Hz
2SC1708
2SC1106
2SC1454
2SC1893
2SA608
2SA826
2SA854
2SC1740
2SC1815
2SA825
2SC2068
2SC1722
2SC1723
2SC1625
2SA490
2SC2242
2SC1514

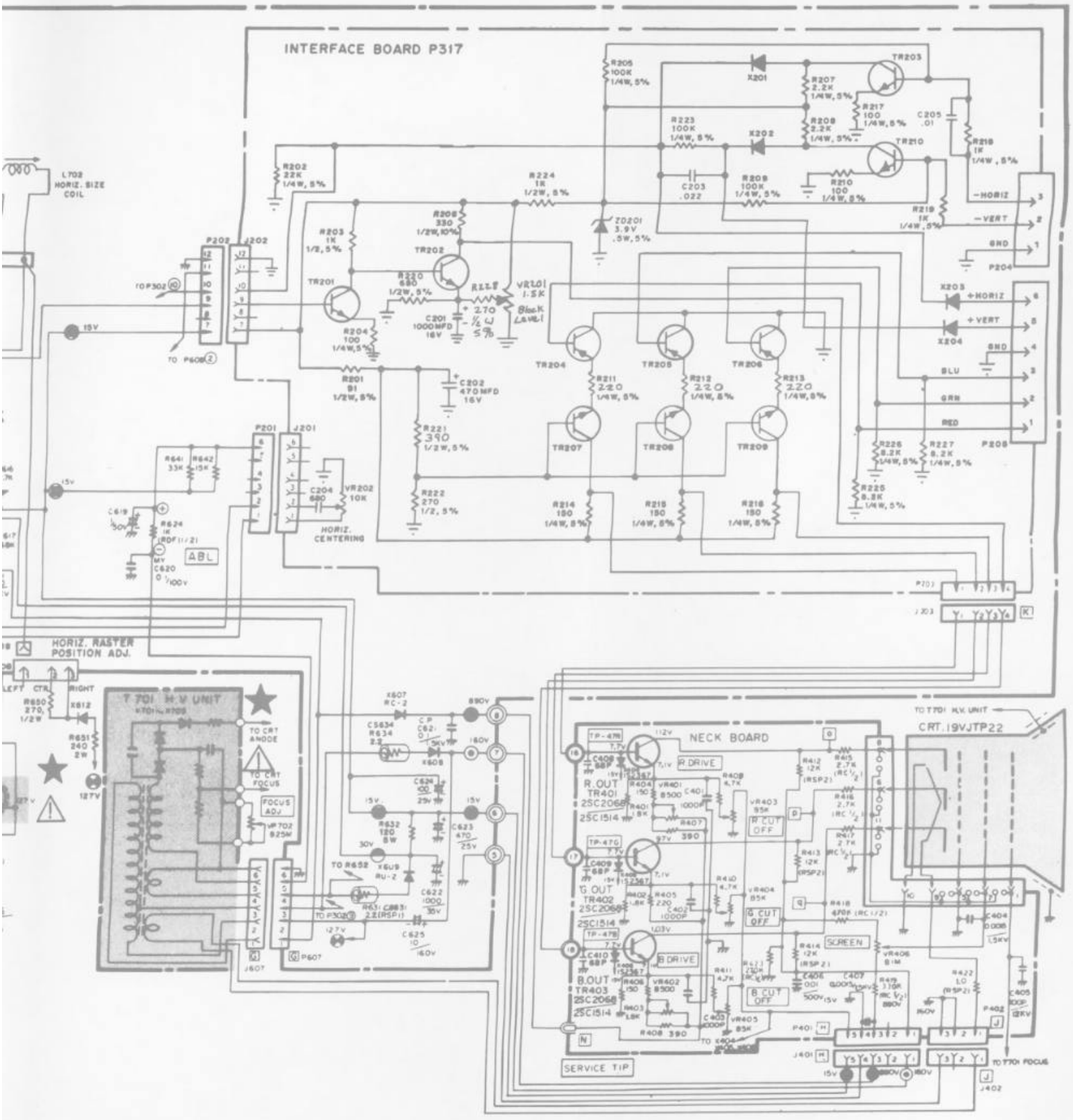
INTERFACE BOARD P317
L702 HORIZ. SIZE COIL
HORIZ. RASTER POSITION ADJ.
T 701 H.V UNIT
TO CRT ANODE
TO CRT FOCUS
FOCUS ADJ
HORIZ. CENTERING
ABL
NECK BOARD
R.DRIVE
R.CUT OFF
G.CUT OFF
B.DRIVE
B.CUT OFF
SCREEN
SERVICE TIP
CRT.19VJTP22
TO T701 H.V. UNIT
TO T701 FOCUS
-HORIZ
-VERT
GND
+HORIZ
+VERT
BLU
GRN
RED

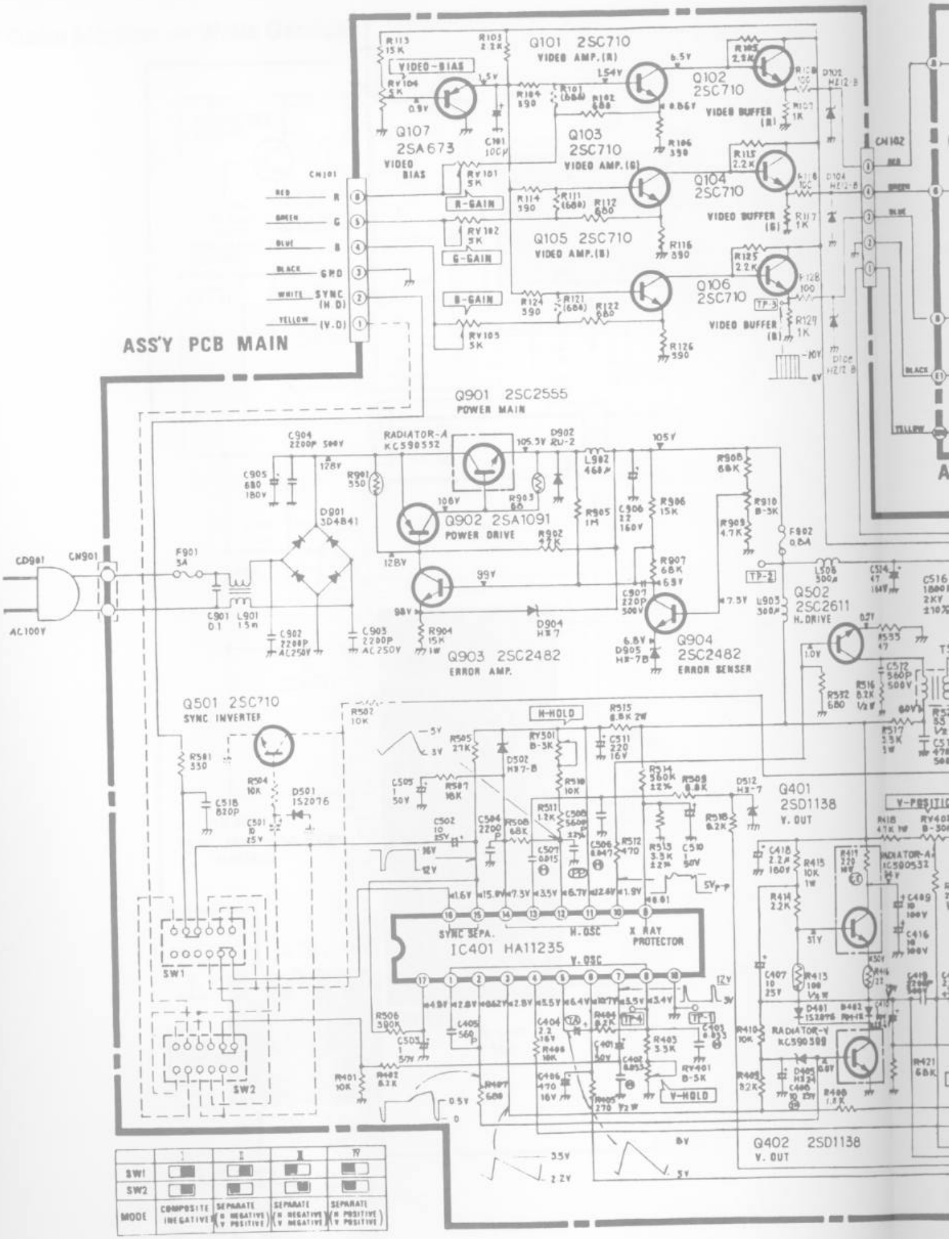
ASS'Y PCB MAIN
CN101
RED R
GREEN G
BLUE B
BLACK GND
WHITE SYNC (H.D)
YELLOW (V.D)
VIDEO-BIAS
R-GAIN
G-GAIN
B-GAIN
Q101 2SC710 VIDEO AMP.(R)
Q102 2SC710 VIDEO BUFFER (R)
Q103 2SC710 VIDEO AMP.(G)
Q104 2SC710 VIDEO BUFFER (G)
Q105 2SC710 VIDEO AMP.(B)
Q106 2SC710 VIDEO BUFFER (B)
Q107 2SA673 VIDEO BIAS
CN102
Q901 2SC2555 POWER MAIN
RADIATOR-A KC590552
Q902 2SA1091 POWER DRIVE
Q903 2SC2482 ERROR AMP.
Q904 2SC2482 ERROR SENSER
Q502 2SC2611 H. DRIVE
CD901
CN901
AC100V
F901 3A
D901 3D4B41
F902 0.8A
Q501 2SC710 SYNC INVERTER
H-HOLD
V-HOLD
IC401 HA11235
SYNC SEPA.
H. OSC
V. OSC
X RAY PROTECTOR
Q401 2SD1138 V. OUT
Q402 2SD1138 V. OUT
RADIATOR-A KC590533
RADIATOR-V KC590589
SW1
SW2
MODE
COMPOSITE (NEGATIVE)
SEPARATE (H NEGATIVE V POSITIVE)
SEPARATE (H NEGATIVE V NEGATIVE)
SEPARATE (H POSITIVE V POSITIVE)

19" Color Monitor Vertica'
—Nanao MC-2000-S
200-0039

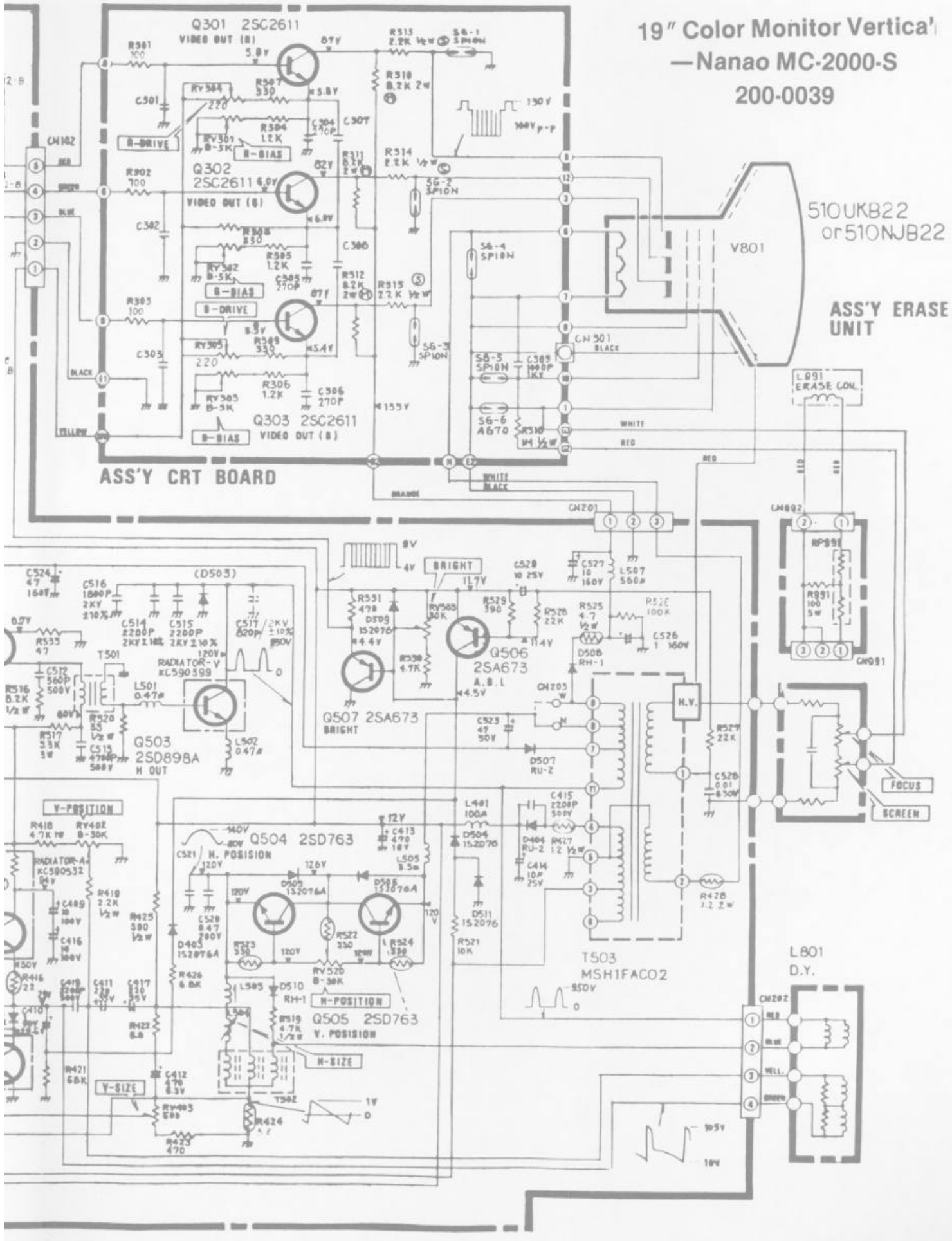

19" Color Monitor — Wells Gardner K4961

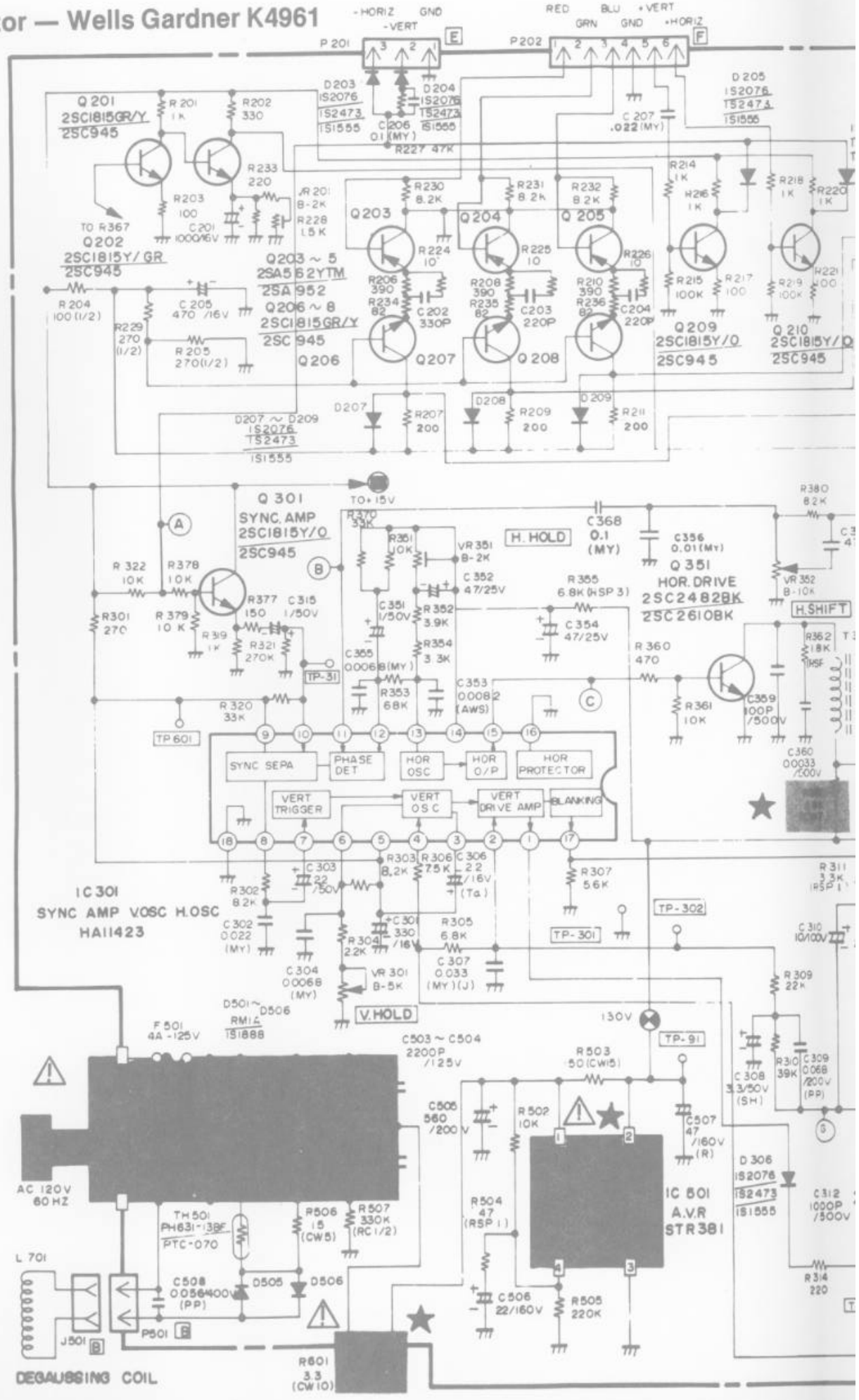

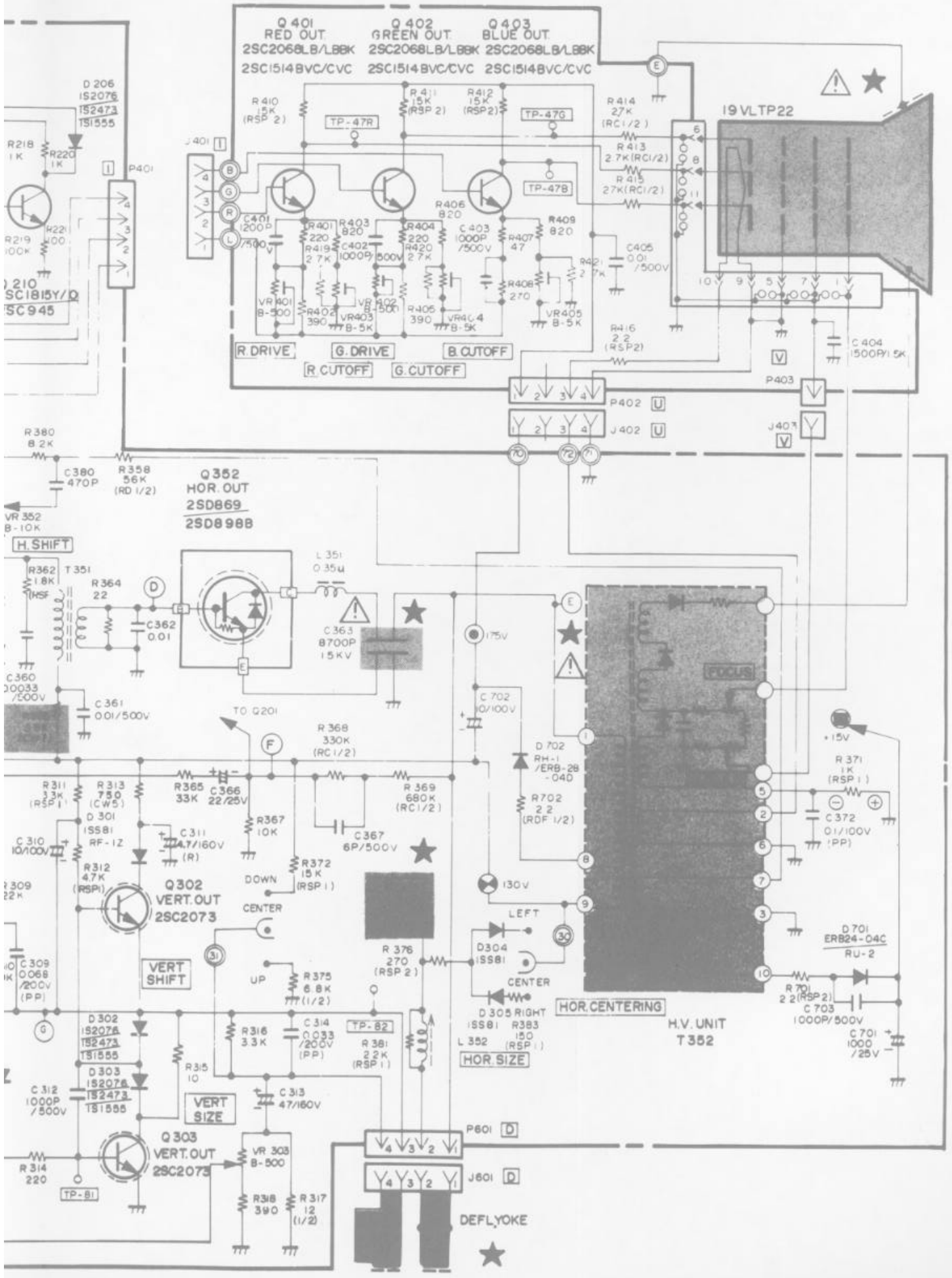
Q401
RED OUT
2SC2068LB/LBBK
2SC1514BVC/CVC
Q402
GREEN OUT
2SC2068LB/LBBK
2SC1514BVC/CVC
Q403
BLUE OUT
2SC2068LB/LBBK
2SC1514BVC/CVC
19VLTP22
R.DRIVE
G.DRIVE
B.CUTOFF
R.CUTOFF
G.CUTOFF
Q352
HOR. OUT
2SD869
2SD898
H.SHIFT
Q302
VERT. OUT
2SC2073
Q303
VERT. OUT
2SC2073
VERT SHIFT
VERT SIZE
HOR. SIZE
HOR. CENTERING
FOCUS
H.V. UNIT
T352
DEFL.YOKE
P401
P402
P403
J401
J402
J403
P601
J601

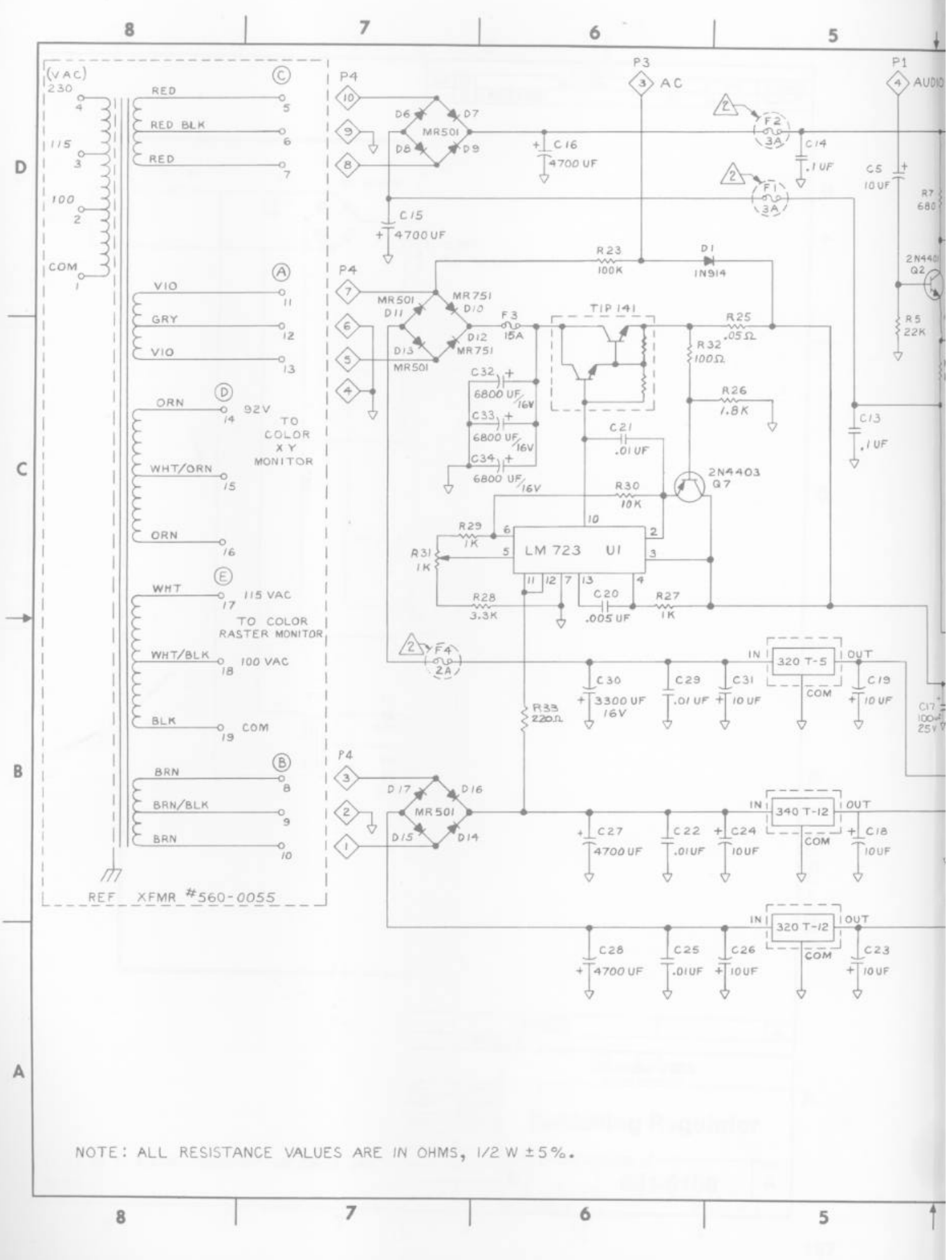

NOTE: ALL RESISTANCE VALUES ARE IN OHMS, 1/2 W ±5%.

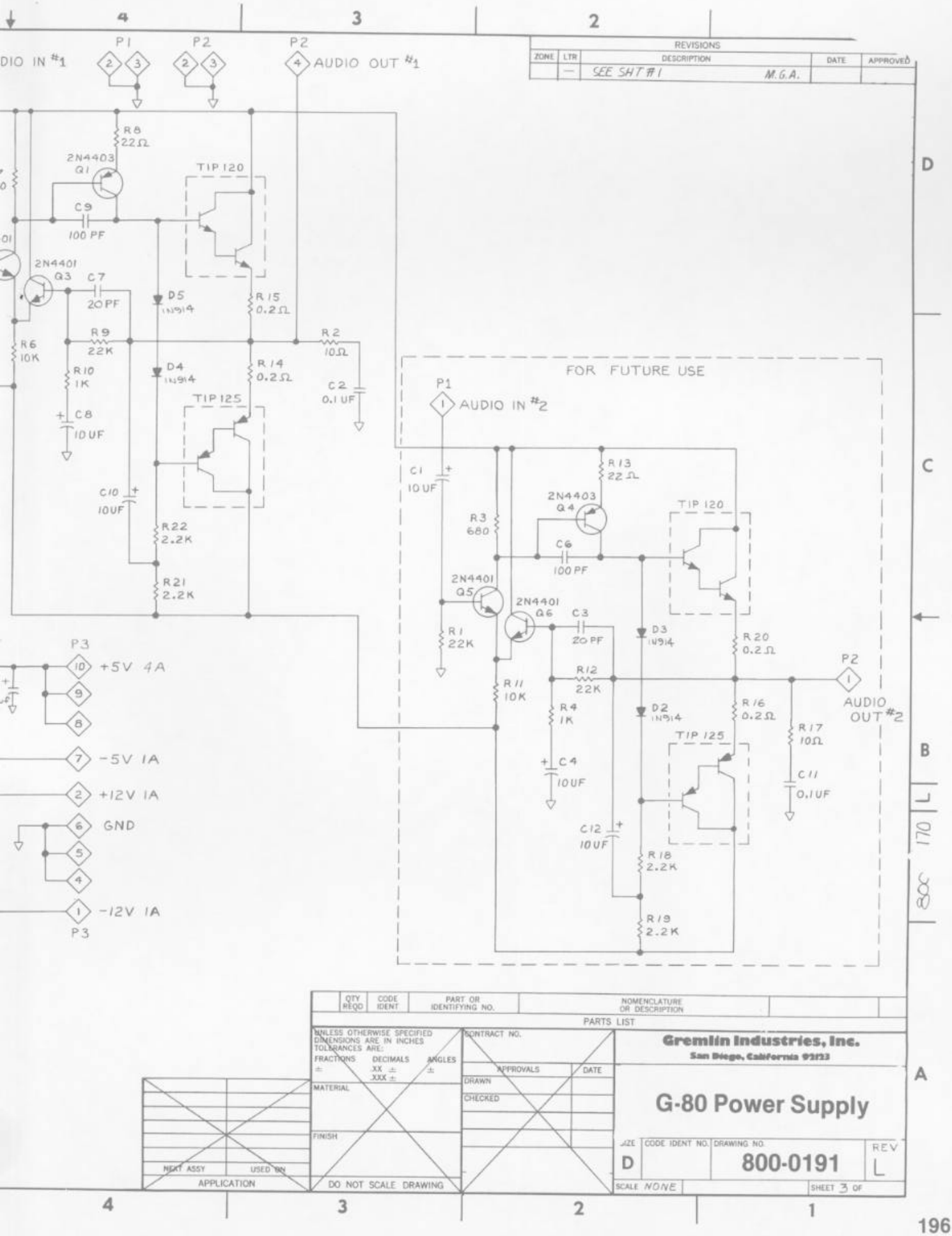

QTY REQD	CODE IDENT	PART OR IDENTIFYING NO.	NOMENCLATURE OR DESCRIPTION

PARTS LIST

UNLESS OTHERWISE SPECIFIED DIMENSIONS ARE IN INCHES
TOLERANCES ARE:
FRACTIONS ± DECIMALS XX ± XXX ± ANGLES ±

MATERIAL

FINISH

NEXT ASSY | USED ON

APPLICATION

DO NOT SCALE DRAWING

CONTRACT NO.

APPROVALS	DATE
DRAWN	
CHECKED	

Gremlin Industries, Inc.
San Diego, California 92123

G-80 Power Supply

SIZE	CODE IDENT NO.	DRAWING NO.	REV
D		800-0191	L

SCALE NONE SHEET 3 OF

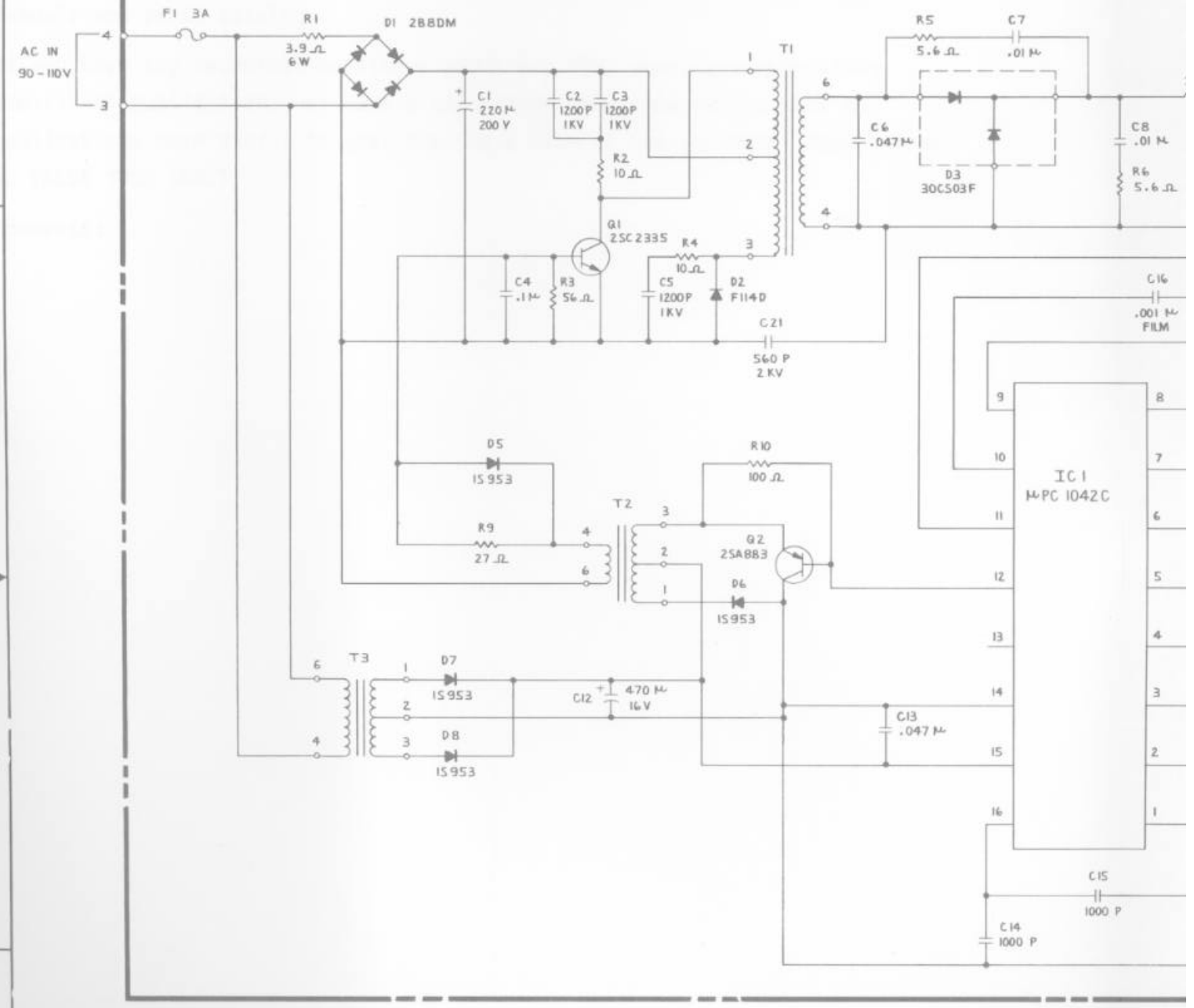

NOTES :

1. R7, R8 AS REQUIRED OTHERWISE USE JUMPER WIRE

REVISIONS				
ZONE	LTR	DESCRIPTION	DATE	APPROVED
	A	RELEASED SD	8-18-81	

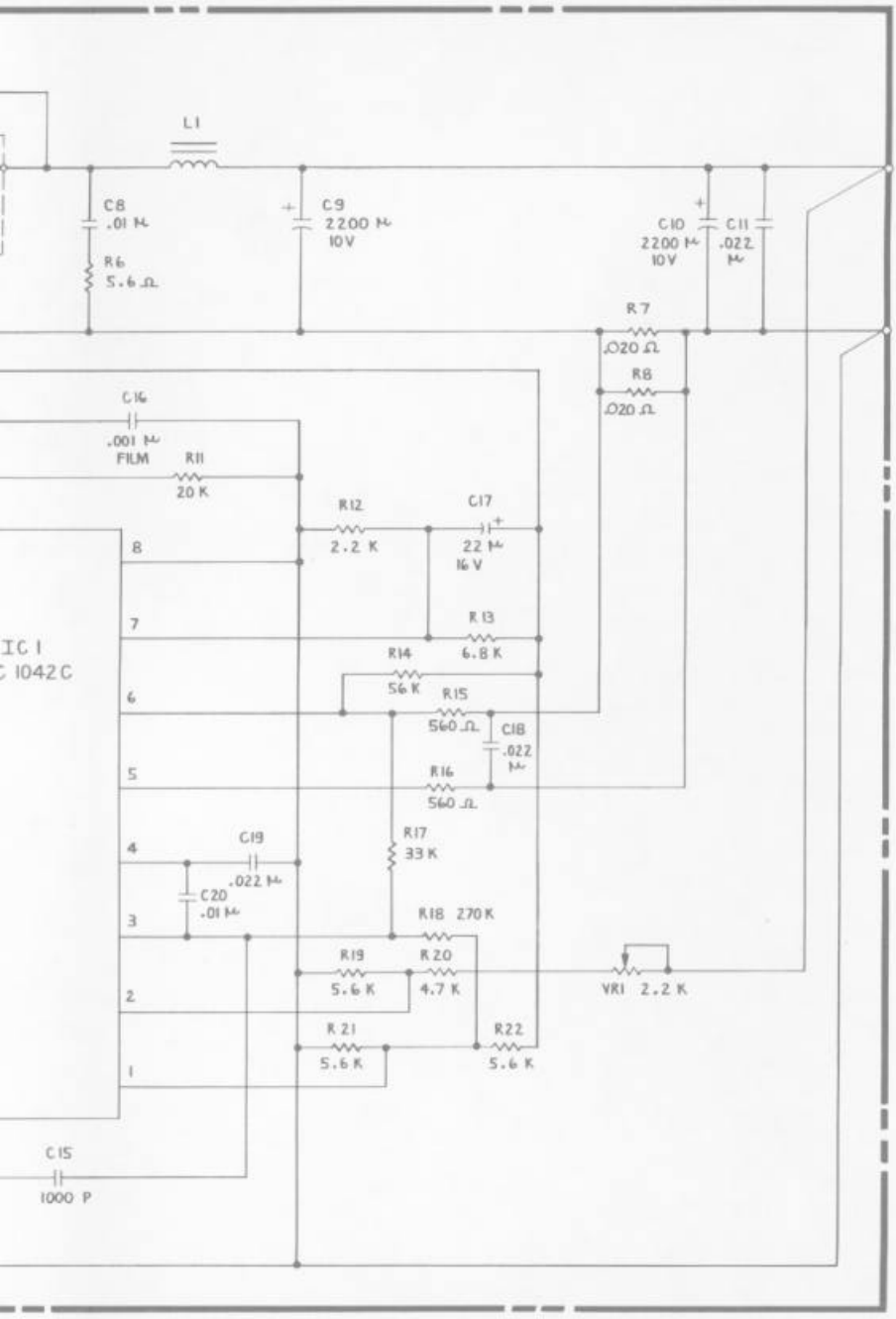

QTY REQD	CODE IDENT	PART OR IDENTIFYING NO.	NOMENCLATURE OR DESCRIPTION	ITEM NO.

PARTS LIST

UNLESS OTHERWISE SPECIFIED DIMENSIONS ARE IN INCHES
TOLERANCES ARE:
FRACTIONS ± DECIMALS XX ± XXX ± ANGLES ±

MATERIAL

FINISH

DO NOT SCALE DRAWING

CONTRACT NO.

APPROVALS	DATE
DRAWN SON DUONG	8-17-81
CHECKED G GRICE	8-17-81
MECH	
ELEC	
MFG	
PROJECT	

NEXT ASSY	USED ON
APPLICATION	

Gremlin/SEGA
San Diego, California 92123

Switching Regulator

SIZE	CODE IDENT NO.	DRAWING NO.	REV
D		601-0158	A

SCALE NONE SHEET 1 OF 1

601-0158 A

WE WELCOME YOUR COMMENTS!

Your comments and suggestions will assist us in improving the usefullness of our publications. They are an integral part of preparing for revisions of manuals and parts catalogs.

If you have any technical questions about any SEGA game, are requesting additional publications, or have a suggestion about how we can make our publications more useful to you, drop us a line or use the handy form below. WE VALUE YOUR INPUT!

Comments:

Please fill in if you wish a reply:

Your Name _____ Distributor

Your Firm's Name _____ Operator

Firm's Address _____ Other

City _____ State _____ Zip _____

Area Code _____ Telephone Number _____

CONGO BONGO™

First Fold

NO POSTAGE
NECESSARY
IF MAILED
IN THE
UNITED STATES

BUSINESS REPLY MAIL
FIRST CLASS PERMIT NO. 10129 SAN DIEGO, CALIFORNIA

POSTAGE WILL BE PAID BY ADDRESSEE

SEGA Electronics, Inc.
16250 Technology Drive
San Diego, California 92127-1985

Attn: Customer Service

Second Fold

Tape This Edge

SEGA®

THE ARCADE EXPERTS